Supplementary Information

The following information is associated with Network Rail Standard:
NR CIV/SD/1268 Rev B

Additional Content Access

Click the link below to access CAD version of this drawing.

CAD Drawing

- CIV/SD/1268

If you have any questions, or need assistance, please contact **IHS Support**

Information accessed via the links above is the property of the Copyright holder

IHS Additional Content Page

Documents
Document Sharing Hub

Copyright Network Rail
Provided by IHS under license with Network Rail
No reproduction or networking permitted without license from IHS
Full document details: NR NR-CIV-SD-1268 ISSUE B 2010

Licensee=Weston Williamson/5989497001, User=sam, albett
Not for Resale, 03/27/2016 21:25:13 MDT

Copyright Network Rail
Provided by IHS under license with Network Rail
No reproduction or networking permitted without license from IHS
Full document details: NR NR-CIV-SD-1268 ISSUE B 2010
Licensee=Weston Williamson/5989497001, User=sam.albett
Not for Resale, 03/27/2016 21:25:13 MDT

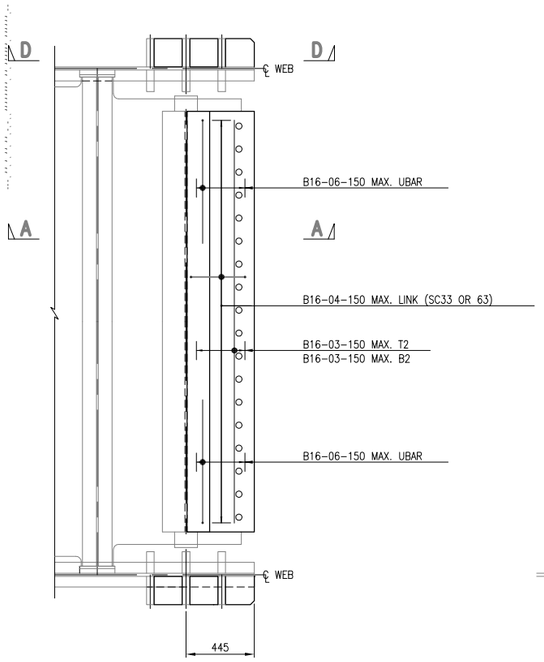

PLAN ON SQUARE DECK OTHER END HANDED

SCALE 1:20

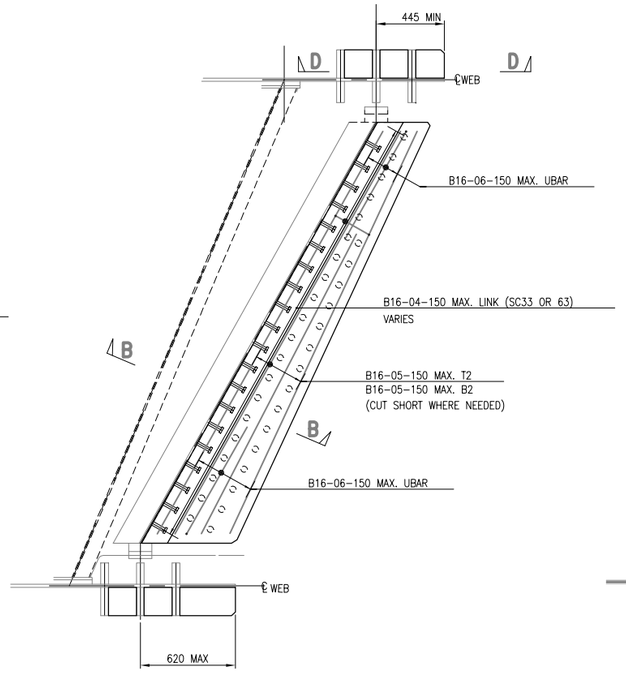

PLAN ON SKEW 0° TO 25° DECK

SCALE 1:20

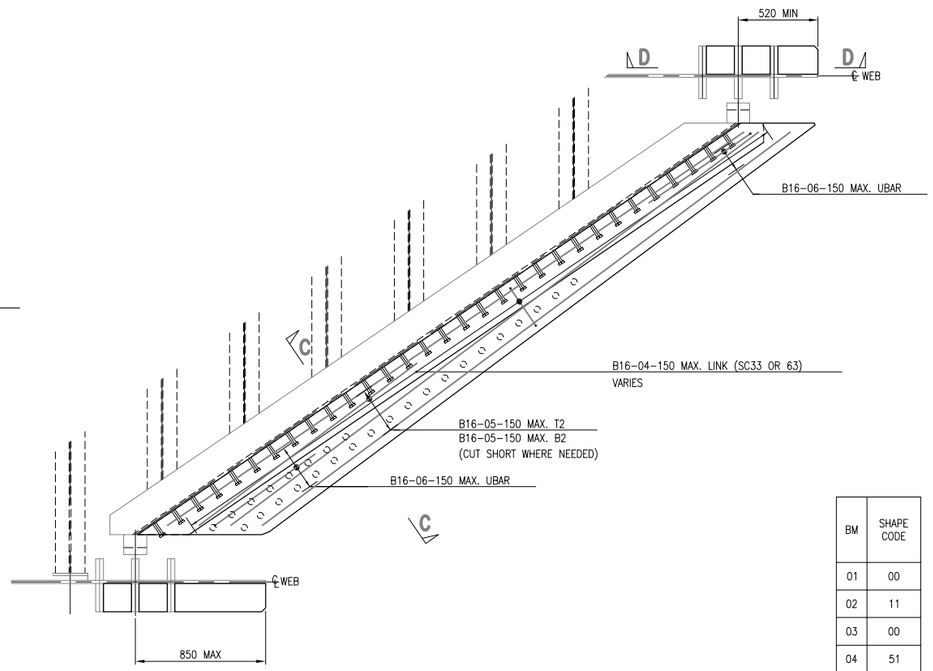

PLAN ON SKEW 25° TO 50° DECK

SCALE 1:20

BM	SHAPE CODE
01	00
02	11
03	00
04	51
05	00
06	21
07	00

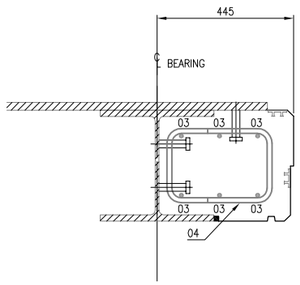

SECTION A–A

SCALE 1:10

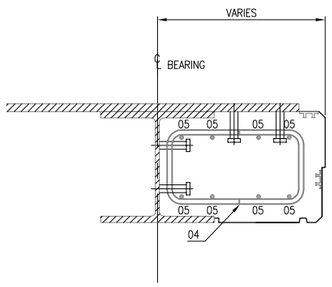

SECTION B–B

SCALE 1:10

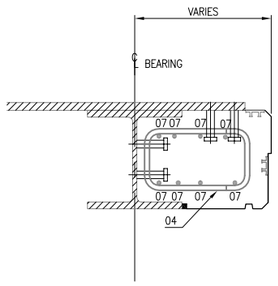

SECTION C–C

SCALE 1:10

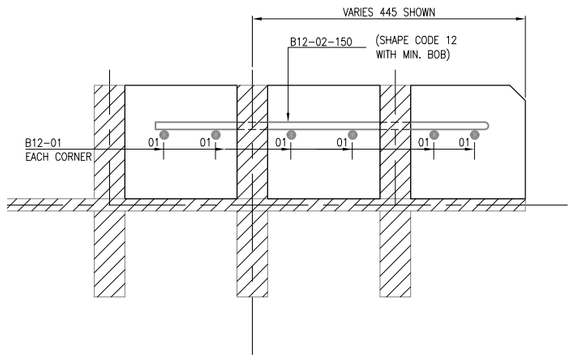

SECTION E–E

SCALE 1:5

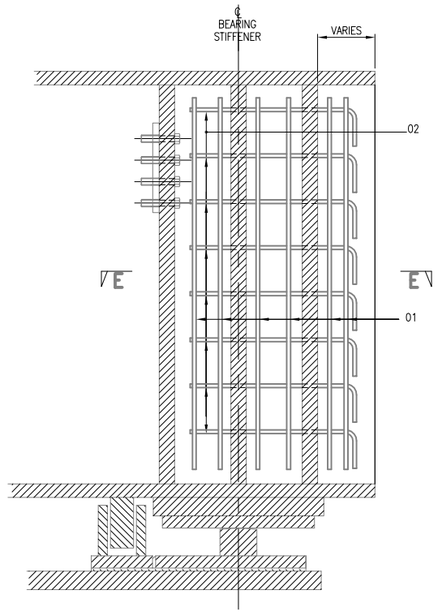

SECTIONAL ELEVATION ON D–D

SCALE 1:10

DRAWING No. NR/CIV/SD/1268

NOTES

1 REFER TO DRAWING NR/CIV/SD/1260 FOR NOTES.

Rev	Date	Description of revision	Design'd	C'kd
B	MAY 10	EUROCODE ISSUE	AGW	NY
A	APR 09	FIRST ISSUE	AGW	NY
P3	30.03.09	FINAL REVIEW FOR FORM B	DE	IP
P2	23.12.08	ISSUE FOR PUBLICATION	DE	IP
P1	31.10.08	INDEPENDENT CHECK	DE	IP

Network Rail

Network Rail Infrastructure Ltd
Registered Office:
Kings Place
90 York Way
London
N1 9AG

	Name	Position	Signature	Date
Approved	Paul Clark	Snr. Proj. Eng. Manager Infrastructure Investment Building and Civils	P.C.	MAY 10

Master copy with original signatures held by Network Rail HQ CIVIL ENGINEERING STANDARD DESIGN

© COPYRIGHT NETWORK RAIL 2009

'Z' TYPE UNDERBRIDGE STANDARD DRAWINGS

REINFORCEMENT DETAILS FOR STEEL FLOOR

Scale: AS SHOWN

Drawing Number: NR/CIV/SD/1268 B

AVA Documents
Document Sharing Hub