Supplementary Information

The following information is associated with Network Rail Standard:
NR CIV/SD/1301 Rev B

Additional Content Access

Click the link below to access CAD version of this drawing.

CAD Drawing

- CIV/SD/1301

If you have any questions, or need assistance, please contact **IHS Support**

Information accessed via the links above is the property of the Copyright holder

IHS Additional Content Page

Documents
Document Sharing Hub

Copyright Network Rail
Provided by IHS under license with Network Rail
No reproduction or networking permitted without license from IHS
Full document details: NR NR-CIV-SD-1301 ISSUE B 2010

Licensee=Weston Williamson/5989497001, User=sam, albett
Not for Resale, 03/27/2016 21:23:41 MDT

Copyright Network Rail
Provided by IHS under license with Network Rail
No reproduction or networking permitted without license from IHS
Full document details: NR NR-CIV-SD-1301 ISSUE B 2010
Licensee=Weston Williamson/5989497001, User=sam.albert
Not for Resale, 03/27/2016 21:23:41 MDT

TYPE

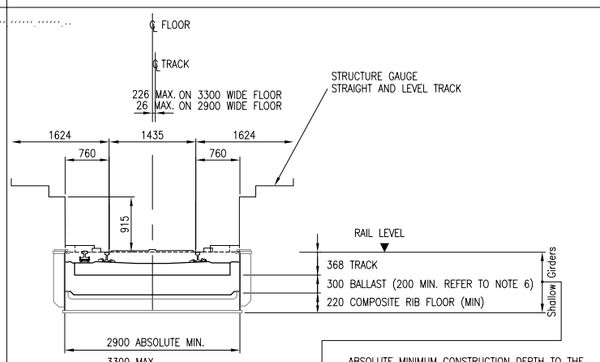

SHALLOW GIRDERS

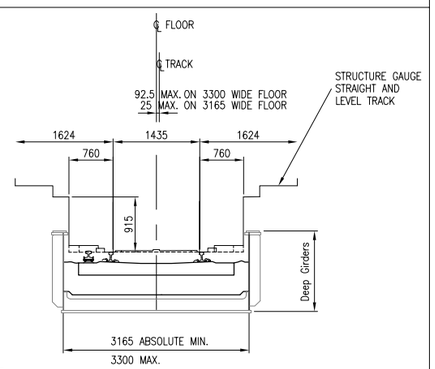

DEEP GIRDERS

SPAN RANGE

4 TO 20 METRES

ARRANGEMENT OF FLOOR & TRANSVERSE RIBS

REFER TO TABLE FOR GUIDANCE ON CROSS GIRDER ARRANGEMENT FOR (APPROXIMATE) SPANS

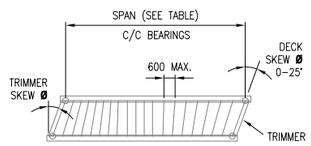

FANNED CROSS GIRDERS

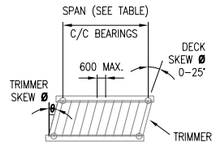

SKEWED CROSS GIRDERS

NOTE.
TRIMMER SKEW DOES NOT EQUAL DECK SKEW WHERE DECK SKEW >25°

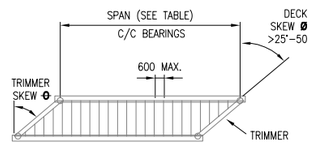

TRIMMED CROSS GIRDERS

MAIN GIRDER AND TRIMMER GIRDER ARTICULATION

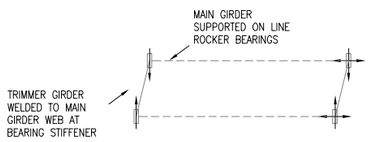

SKEWS FROM SQUARE TO 25 DEGREES

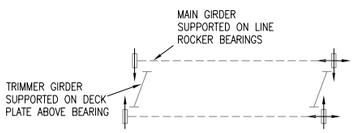

SKEWS FROM 25 DEGRESS TO 50 DEGREES

FLOOR

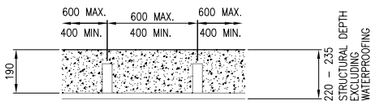

APPROXIMATE LIFT WEIGHT (t) FOR 300mm BALLAST GIRDERS (REFER TO NOTE 7)

	SHALLOW		DEEP	
SPAN	HEAVY	LIGHT	HEAVY	LIGHT
4m	14.2t	14.2t	14.3t	14.3t
7m	25.2t	23.7t	23.6t	23.4t
10m	35.8t	33.2t	33.9t	33.3t
11m	39.7t	39.3t	37.8t	36.7t
12m	43.6t	43.4t	41.7t	40.8t
14m	55.7t	52.3t	49.2t	46.9t
17m	69.7t	63.6t	61.7t	57.5t
20m	81.8t	78.5t	73.2t	68.2t

APPROXIMATE LIFT WEIGHT (t) FOR 200mm BALLAST GIRDERS (REFER TO NOTE 7)

	SHALLOW	
SPAN	HEAVY	LIGHT
4m	14.2t	14.0t
7m	24.4t	23.4t
10m	35.0t	33.3t
11m	39.0t	36.9t
12m	42.9t	41.2t
14m	50.7t	48.7t
17m	61.4t	61.0t
20m	72.0t	71.7t

CONSTRUCTION DEPTH* SUMMARY TABLE FOR 300mm BALLAST GIRDERS (REFER TO NOTE 7)

	SHALLOW		DEEP	
SPAN	HEAVY	LIGHT	HEAVY	LIGHT
4m	903mm	903mm	903mm	903mm
7m	903mm	903mm	903mm	903mm
10m	903mm	903mm	903mm	903mm
11m	903mm	903mm	903mm	903mm
12m	903mm	903mm	903mm	903mm
14m	913mm	913mm	903mm	903mm
17m	918mm	913mm	903mm	903mm
20m	N/A	918mm	903mm	903mm

* CONSTRUCTION DEPTH IN TABLE IS DEPTH BETWEEN RAIL LEVEL AND FLOOR SOFFIT

CONSTRUCTION DEPTH* SUMMARY TABLE FOR 200mm BALLAST GIRDERS (REFER TO NOTE 7)

	SHALLOW	
SPAN	HEAVY	LIGHT
4m	803mm	803mm
7m	803mm	803mm
10m	803mm	803mm
11m	803mm	803mm
12m	803mm	803mm
14m	803mm	803mm
17m	803mm	803mm
20m	N/A	N/A

* CONSTRUCTION DEPTH IN TABLE IS DEPTH BETWEEN RAIL LEVEL AND FLOOR SOFFIT

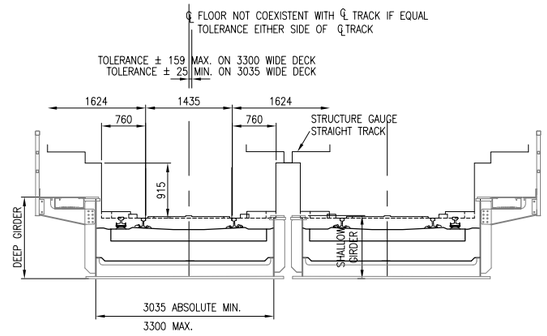

SEE NOTE 4.

TYPICAL 2 TRACK ARRANGEMENT

NOTES CONT.

5. DESIGNER TO DETERMINE APPROPRIATE DECK WIDTH, ENSURING COMPLIANCE WITH STRUCTURE GAUGE, ELECTRICAL GAUGE, TOLERANCE FOR INSTALLATION (POSITIONING OF DECK AND ALSO POSITIONING OF TRACK), CLEARANCE TO SLEEPER ENDS. THE OFFSET NOTED IS THE MAXIMUM POSSIBLE FOR THE GIVEN FLOOR WIDTH. THE TOLERANCE GIVEN ON THIS DRAWING IS THE TOTAL TOLERANCE FOR THE GIVEN DECK WIDTH FOR INSTALLATION OF THE DECK AND POSITIONING OF THE TRACK.

6. THE MINIMUM BALLAST DEPTH SHOULD IDEALLY BE NO LESS THAN 300mm. WHERE BALLAST DEPTH IS LESS THAN 300mm PERMANENT WAY APPROVAL IS REQUIRED.

7. REFER TO TECHNICAL USER MANUAL FOR NOTES ON MINIMUM TRACK RADIUS THAT CAN BE ACCOMMODATED WITHIN THE STANDARD DESIGN DETAILS.

8. APPROXIMATE LIFT WEIGHTS ASSUME 3300mm WIDE DECK, STEEL WEIGHT AND CONCRETE WEIGHT ONLY. APPROXIMATE LIFT WEIGHT DOES NOT ALLOW FOR BALLAST, TRACK, BEARING WEIGHTS OR WALKWAYS.

DRAWING No. NR/CIV/SD/1301

NOTES

1. LIMITS OF APPLICABILITY.

   A. SHALLOW GIRDER ARRANGEMENTS WITH GIRDERS IN THE ZONE OF 0mm TO 110mm ABOVE RAIL LEVEL AND BETWEEN 730mm AND 558mm FROM THE RUNNING EDGE OF THE NEAR RAIL (ALLOWED IN GE/GN8573–2) SHALL NOT BE USED ON THE UK PARTS OF THE HIGH SPEED TRANS EUROPEAN NETWORK (TEN) WHERE THE RAILWAYS (INTEROPERABILITY) REGULATIONS APPLY.

   B. WHERE NARROW DECKS ARE SPECIFIED OR THE TRACK IS OFFSET FROM THE DECK CENTRELINE OR THE TRACK CURVED, THE DESIGNER SHALL ENSURE SUITABLE CLEARANCE BETWEEN THE TRACK (INCLUDING SLEEPERS) AND THE INFRASTRUCTURE ABOVE AND BELOW BALLAST LEVEL, SUCH AS BALLAST PLATES.

2. HEAVY AND LIGHT DETAILS

   MAIN GIRDERS AND DECK FLOORS HAVE BEEN DESIGNATED FOR LIGHT (L) AND HEAVY (H) DEPENDING ON THE ANNUAL RAILWAY TRAFFIC TONNAGE PER TRACK AND THE TRAFFIC TYPE. REFER TO THE TABLE BELOW.

MAIN GIRDERS AND FLOORS

TRAFFIC \ ANNUAL TONAGE ×10⁶	42–27	27–18	18–12	12–7
25t axles	HEAVY GIRDERS			
EC Mix			LIGHT GIRDERS	
Type 9 MUs				

B

3. TRANSVERSE RIB ARRANGEMENT

   THE TABLE BELOW INDICATES THE ARRANGEMENT OF TRANSVERSE RIBS FOR DIFFERENT SPAN AND DECK SKEW ARRANGEMENTS. THE TABLE IS INDICATIVE ONLY AND THE DESIGNER MUST SELECT THE APPROPRIATE ARRANGEMENT FOR THE SCHEME SPECIFIC SKEW, SPAN AND FLOOR WIDTH.

SKEW (DEGREES)	SPAN (APPROX)	TRANSVERSE RIB ARRANGEMENT
0 TO <15	4 TO 20m	FANNED
15	<4.0m	SKEWED
15	>4.0m	FANNED
20	<7.0m	SKEWED
20	>7.0m	FANNED
22.5	<8.0m	SKEWED
22.5	>8.0m	FANNED
25	<9.0m	SKEWED
25	>9.0m	FANNED
>25	4 TO 20m	TRIMMED

4. MAIN GIRDER ARRANGEMENT.

   TYPICAL ARRANGEMENT WITH ONE DEEP GIRDER (OUTSIDE), ACTING AS ROBUST KERB AND ONE SHALLOW GIRDER (INNER) WHERE ADJACENT TO ANOTHER DECK

Rev	Date	Description of revision	Design'd	C'kd
B	MAY 10	EUROCODE ISSUE	AGW	NY
A	APR 09	FIRST ISSUE	AGW	NY
P3	31.03.09	FINAL REVIEW FOR FORM B	DE	IP
P2	23.01.09	ISSUE FOR PUBLICATION	DE	IP
P1	14.11.08	INDEPENDENT CHECK	DE	IP

Network Rail
Network Rail Infrastructure Ltd
Registered Office:
Kings Place
90 York Way
London
N1 9AG

	Name	Position	Signature	Date
Approved	Paul Clark	Snr. Proj. Eng. Manager Infrastructure Investment Building and Civils	P.C.	MAY 10

Master copy with original signatures held by Network Rail HQ CIVIL ENGINEERING STANDARD DESIGN

© COPYRIGHT NETWORK RAIL 2009

'U' TYPE UNDERBRIDGE STANDARD DRAWINGS

GENERAL INFORMATION
KEY TO TYPES

Scale: AS SHOWN

Drawing Number: NR/CIV/SD/1301 B

AVA Documents
Document Sharing Hub