Supplementary Information

The following information is associated with Network Rail Standard:
NR CIV/SD/1312 Rev B

Additional Content Access

Click the link below to access CAD version of this drawing.

CAD Drawing

- CIV/SD/1312

If you have any questions, or need assistance, please contact **IHS Support**

Information accessed via the links above is the property of the Copyright holder

IHS Additional Content Page

--`,,,,,,`,,,,,,`,,`,,,,,,,,,`-`-`--`,,`,,`,`,,`---

Documents
Document Sharing Hub

Copyright Network Rail
Provided by IHS under license with Network Rail
No reproduction or networking permitted without license from IHS
Full document details: NR NR-CIV-SD-1312 ISSUE B 2010

Licensee=Weston Williamson/5989497001, User=sam, albett
Not for Resale, 03/27/2016 21:28:53 MDT

Copyright Network Rail
Provided by IHS under license with Network Rail
No reproduction or networking permitted without license from IHS
Full document details: NR NR-CIV-SD-1312 ISSUE B 2010
Licensee=Weston Williamson/5989487001, User=sam. albert
Not for Resale, 03/27/2016 21:28:53 MDT

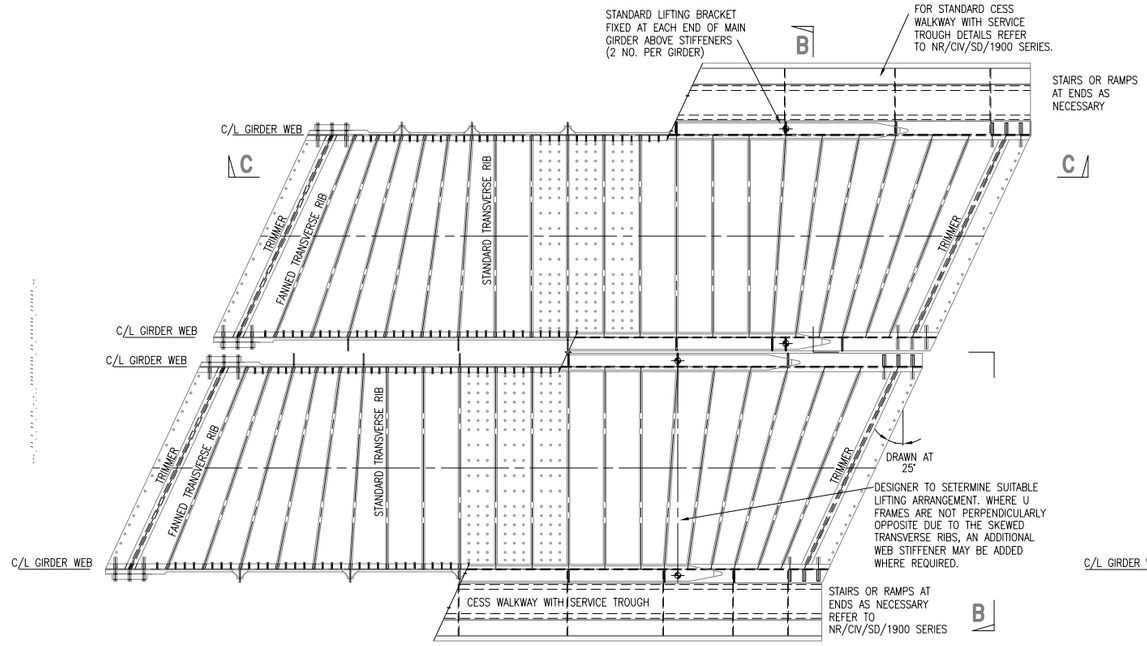

PART PLAN ON FLOOR PLATE
SCALE 1:50

PART PLAN ON TOP FLANGE
SCALE 1:50

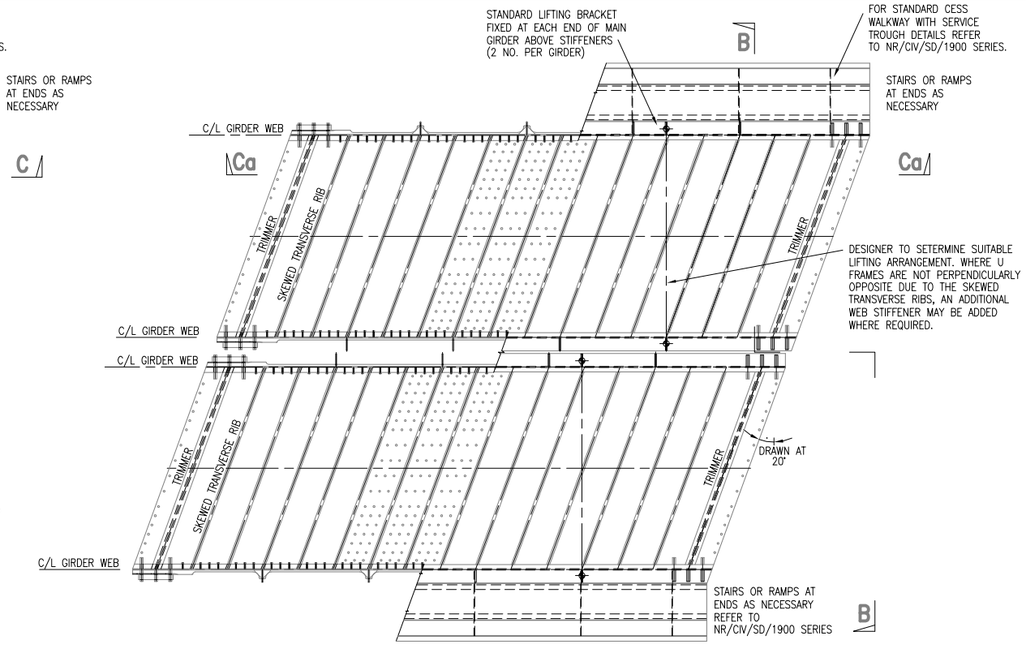

PART PLAN ON FLOOR PLATE
SCALE 1:50

PART PLAN ON TOP FLANGE
SCALE 1:50

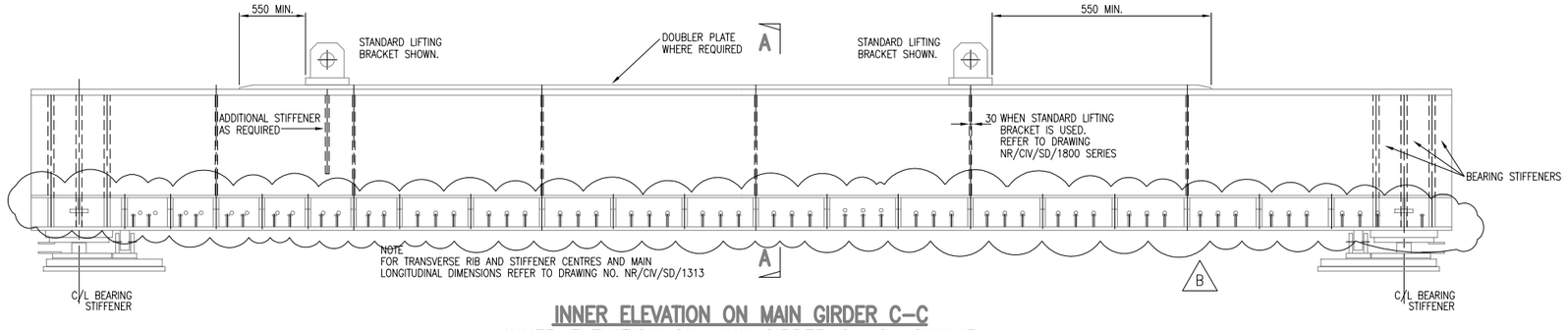

INNER ELEVATION ON MAIN GIRDER C–C
INNER ELEVATION ON MAIN GIRDER Ca–Ca SIMILAR
SCALE 1:25

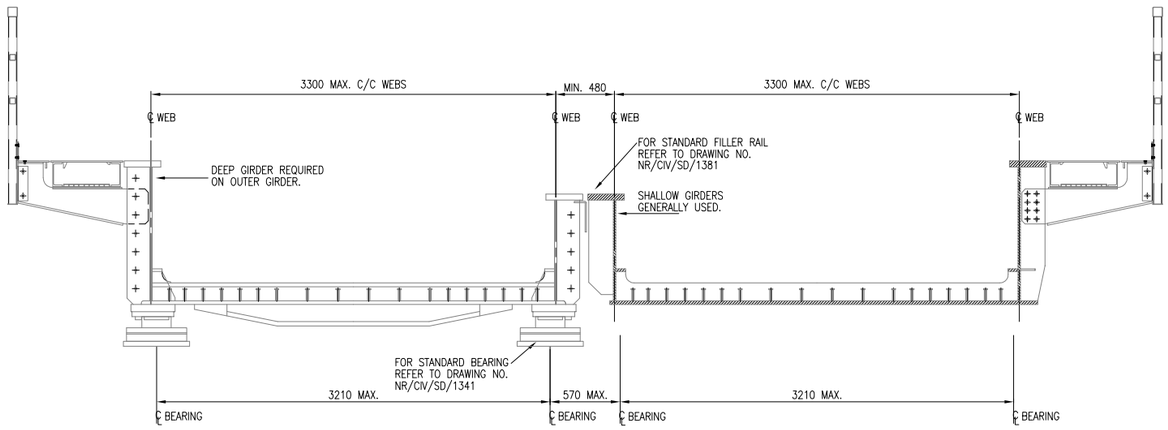

SPLIT SECTION B–B
SCALE 1:25

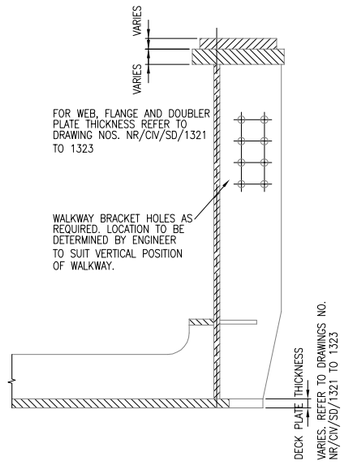

SECTION A–A
SCALE 1:10

DRAWING No. NR/CIV/SD/1312

NOTES

1. REFER TO DRAWING NR/CIV/SD/1310 FOR NOTES

Rev	Date	Description of revision	Design'd	C'kd
B	MAY 10	EUROCODE ISSUE	AGW	NY
A	APR 09	FIRST ISSUE	AGW	NY
P3	31.03.09	FINAL REVIEW FOR FORM B	DE	IP
P2	03.03.09	NETWORK RAIL REVIEW	DE	IP
P1	14.11.08	INDEPENDENT CHECK	DE	IP

Network Rail

Network Rail Infrastructure Ltd
Registered Office:
Kings Place
90 York Way
London
N1 9AG

	Name	Position	Signature	Date
Approved	Paul Clark	Snr. Proj. Eng. Manager Infrastructure Investment Building and Civils	P.C.	MAY 10

Master copy with original signatures held by Network Rail HQ CIVIL ENGINEERING STANDARD DESIGN

© COPYRIGHT NETWORK RAIL 2009

'U' TYPE UNDERBRIDGE STANDARD DRAWINGS

STEELWORK GENERAL ASSEMBLY DETAILS 0° TO 25° SKEW FLOOR SHEET 1 OF 2

Scale: AS SHOWN

Drawing Number: NR/CIV/SD/1312 B

AVA Documents
Document Sharing Hub