Supplementary Information

The following information is associated with Network Rail Standard:
NR CIV/SD/1325 Rev B

Additional Content Access

Click the link below to access CAD version of this drawing.

CAD Drawing

- CIV/SD/1325

If you have any questions, or need assistance, please contact **IHS Support**

Information accessed via the links above is the property of the Copyright holder

IHS Additional Content Page

Documents
Document Sharing Hub

Copyright Network Rail
Provided by IHS under license with Network Rail
No reproduction or networking permitted without license from IHS
Full document details: NR NR-CIV-SD-1325 ISSUE B 2010

Licensee=Weston Williamson/5989497001, User=sam, albett
Not for Resale, 03/27/2016 21:30:33 MDT

Copyright Network Rail
Provided by IHS under license with Network Rail
No reproduction or networking permitted without license from IHS
Full document details: NR NR-CIV-SD-1325 ISSUE B 2010
Licensee=Weston Williamson/5989497001, User=sam, albert
Not for Resale, 03/27/2016 21:30:33 MDT

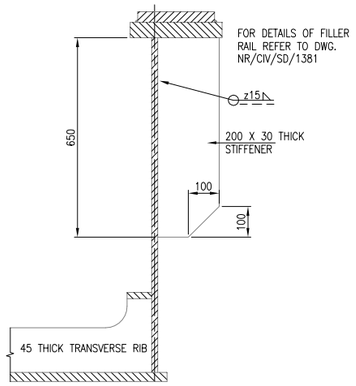

SECTION G–G INNER AND OUTER GIRDERS

SCALE 1:10

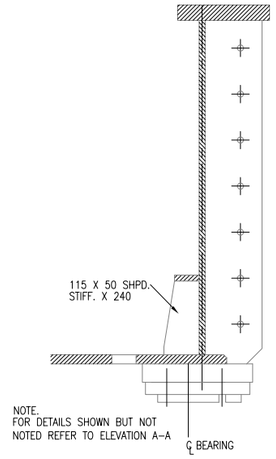

SECTION F–F FOR HORIZONTAL DECKS INNER AND OUTER GIRDERS

SCALE 1:10

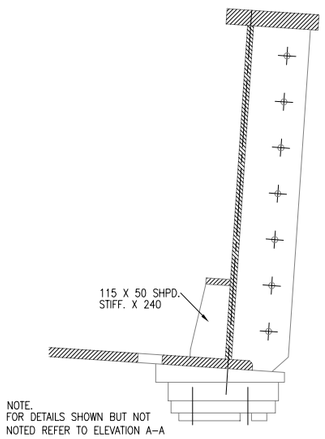

SECTION F–F FOR SUPERELEVATED BRIDGE DECKS INNER AND OUTER GIRDERS

SCALE 1:10

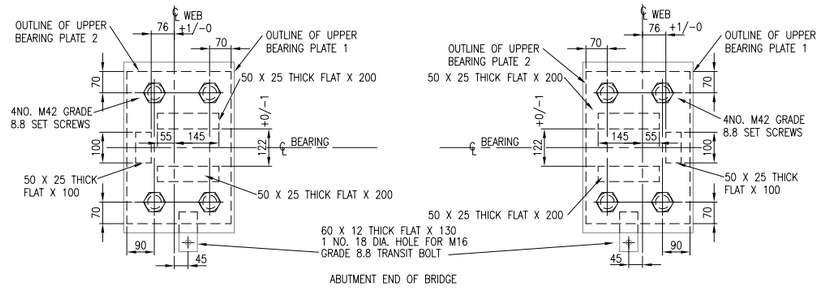

PLAN ON BEARING PLATES – FIXED END

SCALE 1:10

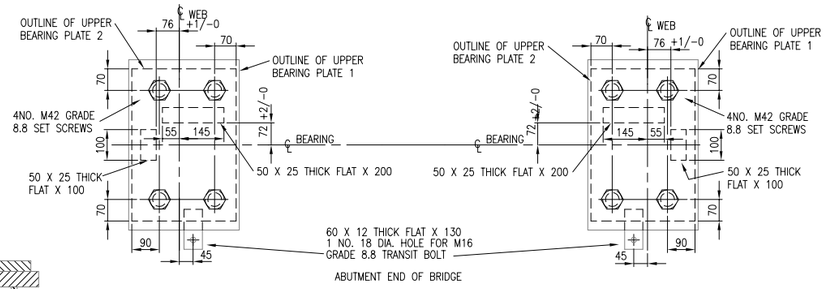

PLAN ON BEARING PLATES – FREE END

SCALE 1:10

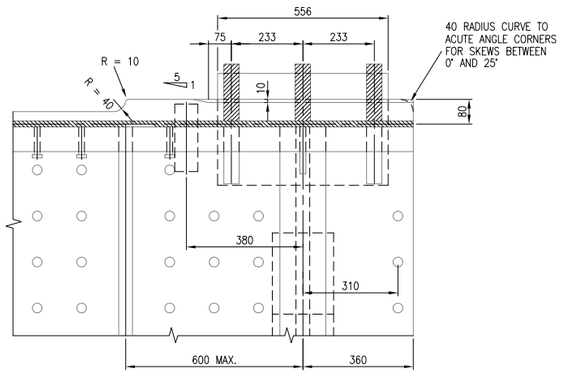

DETAIL AT SQUARE END OF GIRDER 0° TO 25° SKEW SIMILAR

SCALE 1:10

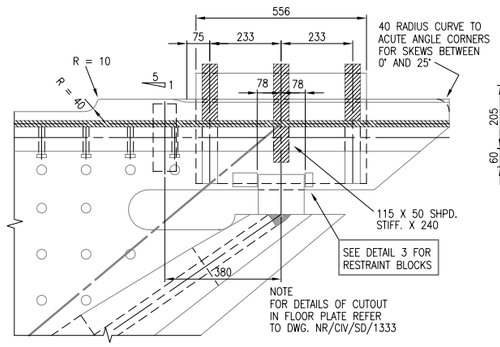

PLAN ON FLOOR PLATE AT ACUTE ANGLE CORNER

OBTUSE ANGLE CORNER SIMILAR FOR 25° TO 50° SKEW ONLY

SCALE 1:10

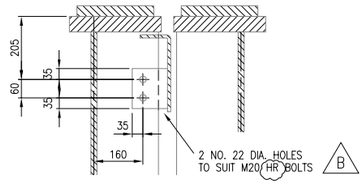

DETAIL FOR DRILLING STIFFENERS ON ONE OF THE 6 FOOT GIRDERS FOR THE FILLER RAIL.

SCALE 1:10

(CASE SHOWN IS FOR LEVEL DECKS. SEE USER GUIDE FOR CANTED DECKS)

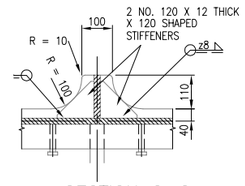

SECTION C–C OUTER GIRDERS ONLY

SCALE 1:10

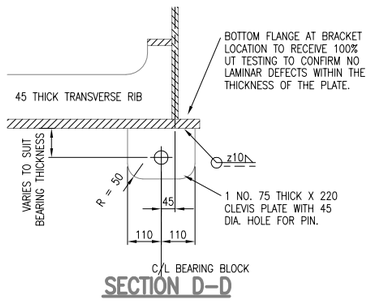

SECTION D–D FOR HORIZONTAL BRIDGE DECKS

SCALE 1:10

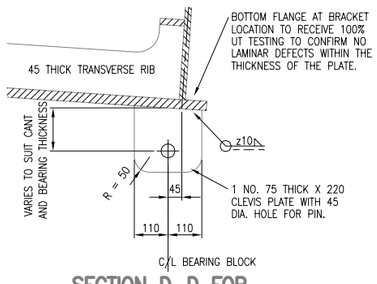

SECTION D–D FOR SUPERELEVATED BRIDGE DECKS

SCALE 1:10

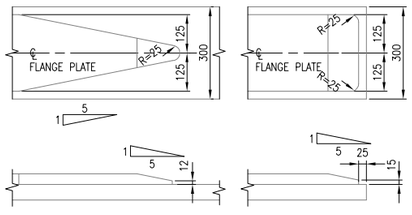

DETAIL 1 CURTAILMENT DETAIL TYPE 1

SCALE 1:10

DETAIL 1 CURTAILMENT DETAIL TYPE 2

(WHERE DOUBLER PLATE REQUIRED OVER FULL LENGTH OF GIRDER ONLY)

SCALE 1:10

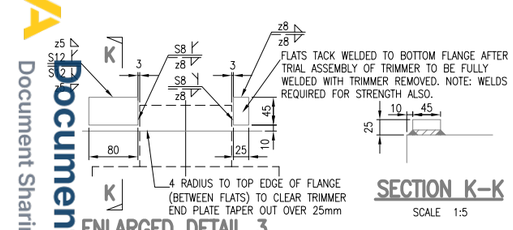

ENLARGED DETAIL 3

SCALE 1:5

SECTION K–K

SCALE 1:5

DRAWING No. NR/CIV/SD/1325

NOTES

1. REFER TO DRAWING NO. NR/CIV/SD/1330 FOR NOTES
2. TO BE READ IN CONJUNCTION WITH DRAWING NR/CIV/SD/1324

Rev	Date	Description of revision	Design'd	C'kd
B	MAY 10	EUROCODE ISSUE	AGW	NY
A	APR 09	FIRST ISSUE	AGW	NY
P1	31.03.09	FINAL REVIEW FOR FORM B	DE	IP

Network Rail

Network Rail Infrastructure Ltd
Registered Office:
Kings Place
90 York Way
London
N1 9AG

Approved	Paul Clark	Snr. Proj. Eng. Manager Infrastructure Investment Building and Civils	P.C.	MAY 10
	Name	Position	Signature	Date

Master copy with original signatures held by Network Rail HQ CIVIL ENGINEERING STANDARD DESIGN

© COPYRIGHT NETWORK RAIL 2009

'U' TYPE UNDERBRIDGE STANDARD DRAWINGS

MAIN GIRDER DETAILS SHEET 2 OF 2

Scale: AS SHOWN

Drawing Number: NR/CIV/SD/1325 B

AVA Documents Document Sharing Hub