The following information is associated with Network Rail Standard:
NR CIV/SD/1427 Rev B

Additional Content Access

Click the link below to access CAD version of this drawing.

CAD Drawing

- CIV/SD/1427

If you have any questions, or need assistance, please contact **IHS Support**

Information accessed via the links above is the property of the Copyright holder

IHS Additional Content Page

Documents
Document Sharing Hub

Copyright Network Rail
Provided by IHS under license with Network Rail
No reproduction or networking permitted without license from IHS
Full document details: NR NR-CIV-SD-1427 ISSUE B 2010

Licensee=Weston Williamson/5989497001, User=sam, albett
Not for Resale, 03/27/2016 21:26:14 MDT

Copyright Network Rail
Provided by IHS under license with Network Rail
No reproduction or networking permitted without license from IHS
Full document details: NR NR-CIV-SD-1427 ISSUE B 2010
Licensee=Weston Williamson/5989497001, User=sam.allett
Not for Resale, 03/27/2016 21:26:14 MDT

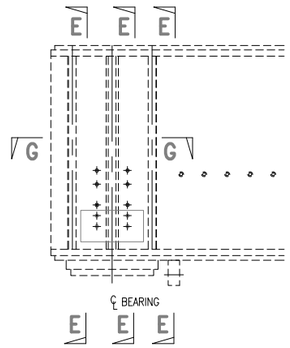

VARIATION TO MAIN GIRDER ELEVATION OBTUSE CORNERS FOR 25° TO 50° FLOORS

SCALE 1:20

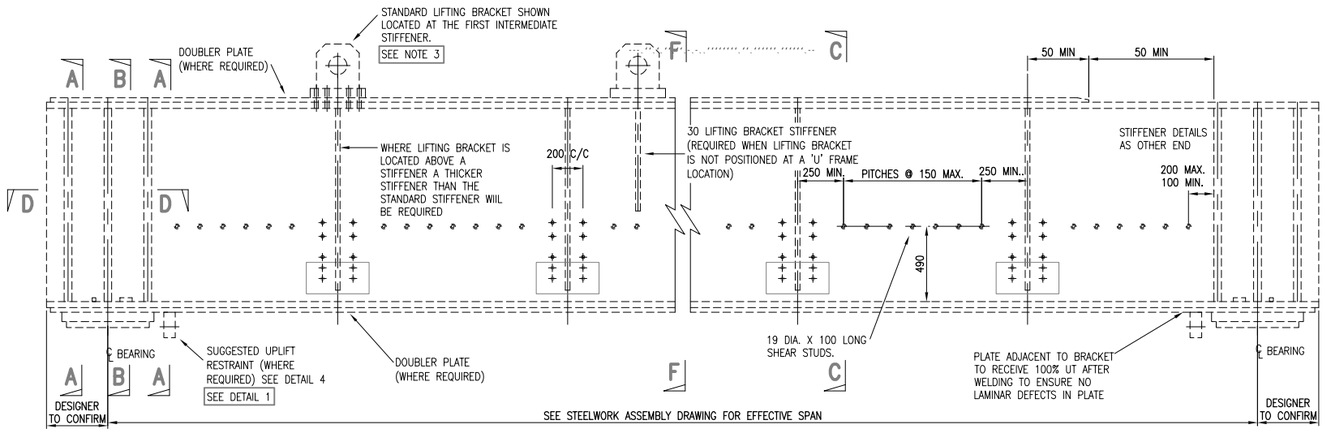

MAIN GIRDER ELEVATION FOR SQUARE & 0° TO 25° FLOORS

SCALE 1:20

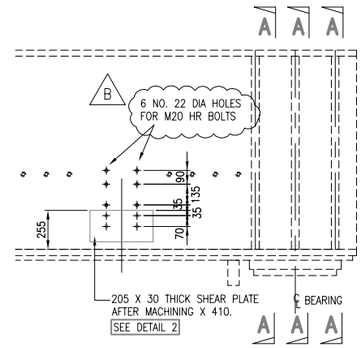

VARIATION TO MAIN GIRDER ELEVATION ACUTE CORNERS FOR 25° TO 50° FLOORS

SCALE 1:20

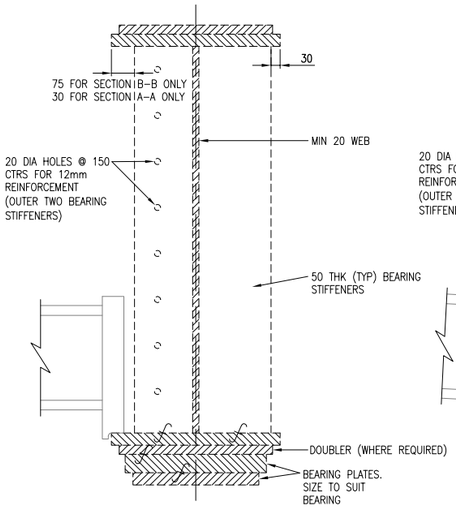

SECTIONS A–A AND B–B NOTE VARIATION

SCALE 1:10

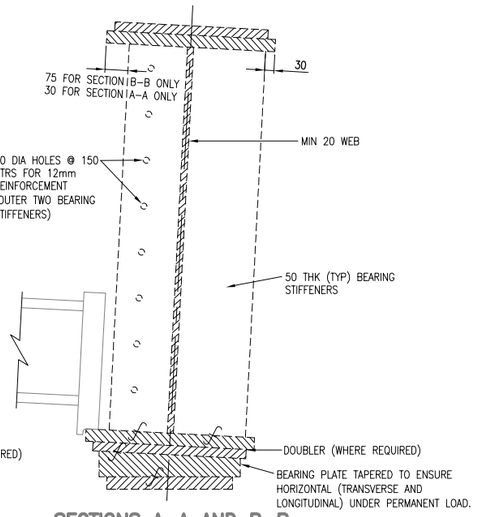

SECTIONS A–A AND B–B FOR CANTED DECK NOTE VARIATION

SCALE 1:10

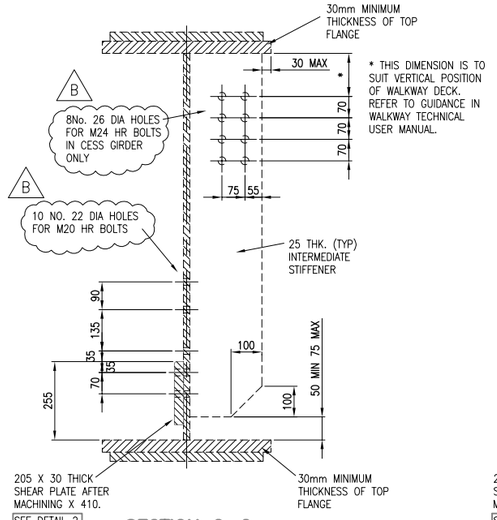

SECTION C–C

SCALE 1:10

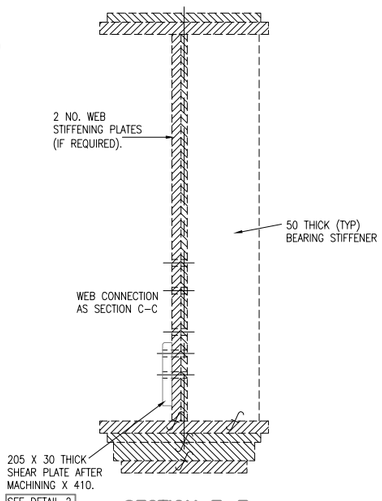

SECTION E–E

SCALE 1:10

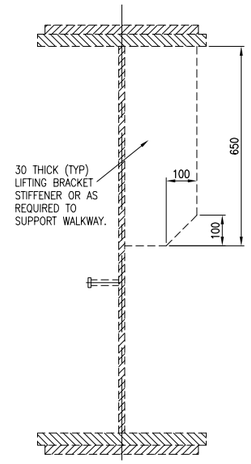

SECTION F–F

SCALE 1:10

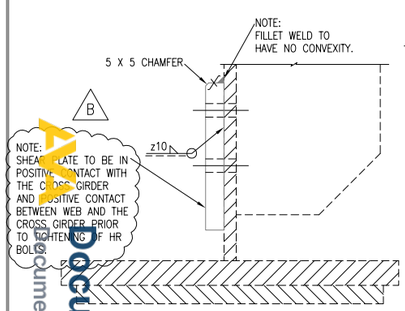

DETAIL 2 SHEAR PLATE WELD DETAIL

SCALE 1:5

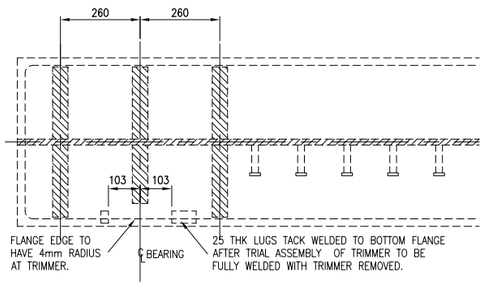

NOTE
DESIGNER TO DETERMINE PRECISE TORSIONAL EFFECTS ON TRIMMER AND DETAILS.

SECTION D–D

SCALE 1:10

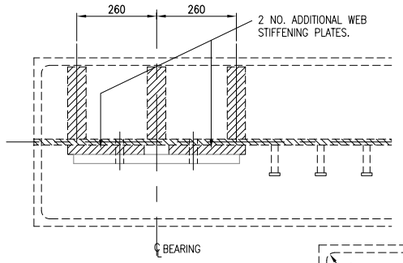

SECTION G–G

SCALE 1:10

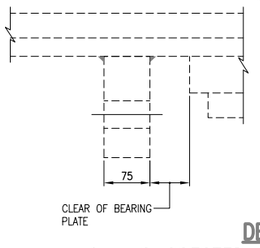

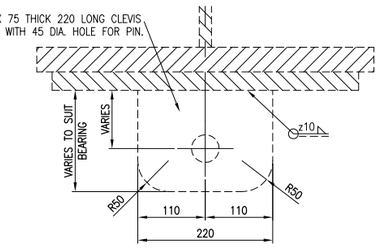

DETAIL 1 SUGGESTED UPLIFT RESTRAINT

SCALE 1:5

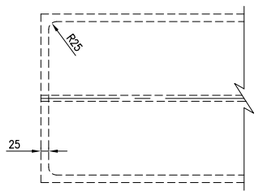

END DETAIL OF NON–CURTAILED DOUBLER

SCALE 1:10

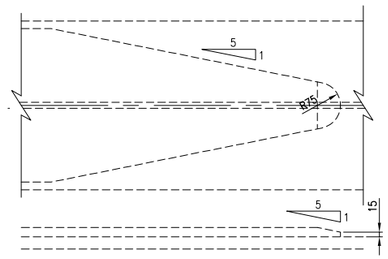

END DETAIL OF CURTAILED DOUBLER

SCALE 1:10

DRAWING No. NR/CIV/SD/1427

NOTES

1. REFER TO DRAWING NO. NR/CIV/SD/1425 FOR NOTES.
2. SUGGESTED CAMBER AND ELEVATION OF MAIN GIRDERS.

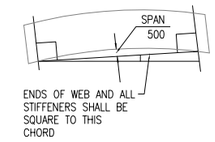

3. STANDARD LIFTING BRACKET SHOWN ONLY.

Rev	Date	Description of revision	Design'd	C'kd
B	MAY 10	EUROCODE ISSUE	AGW	NY
A	22.12.09	FIRST ISSUE	AGW	NY
P2	09.04.09	INDEPENDENT CHECK	LZ	IP
P1	11.11.08	INDEPENDENT CHECK	LZ	IP

Network Rail

Network Rail Infrastructure Ltd
Registered Office:
Kings Place
90 York Way
London
N1 9AG

Approved	Paul Clark	Snr. Proj. Eng. Manager Infrastructure Investment Building and Civils	P.C.	MAY 10
	Name	Position	Signature	Date

Master copy with original signatures held by Network Rail HQ CIVIL ENGINEERING STANDARD DESIGN

© COPYRIGHT NETWORK RAIL 2009

'D' TYPE UNDERBRIDGE STANDARD DRAWINGS

MAIN GIRDER STEELWORK DETAILS SINGLE TRACK COMPOSITE FLOOR

Scale	AS SHOWN
Drawing Number	NR/CIV/SD/1427 B

Documents
Document Sharing Hub