Supplementary Information

The following information is associated with Network Rail Standard:
NR CIV/SD/1431 Rev B

Additional Content Access

Click the link below to access CAD version of this drawing.

CAD Drawing

- CIV/SD/1431

If you have any questions, or need assistance, please contact **IHS Support**

Information accessed via the links above is the property of the Copyright holder

IHS Additional Content Page

--`,,,,,,`,,,,,,`,,`,,,,,,,,``-`-`,,`,,`,`,,`---

Documents
Document Sharing Hub

Copyright Network Rail
Provided by IHS under license with Network Rail
No reproduction or networking permitted without license from IHS
Full document details: NR NR-CIV-SD-1431 ISSUE B 2010

Licensee=Weston Williamson/5989497001, User=sam, albett
Not for Resale, 03/27/2016 21:26:17 MDT

Copyright Network Rail
Provided by IHS under license with Network Rail
No reproduction or networking permitted without license from IHS
Full document details: NR NR-CIV-SD-1431 ISSUE B 2010
Licensee=Weston Williamson/5989497001, User=sam.albett
Not for Resale, 03/27/2016 21:26:17 MDT

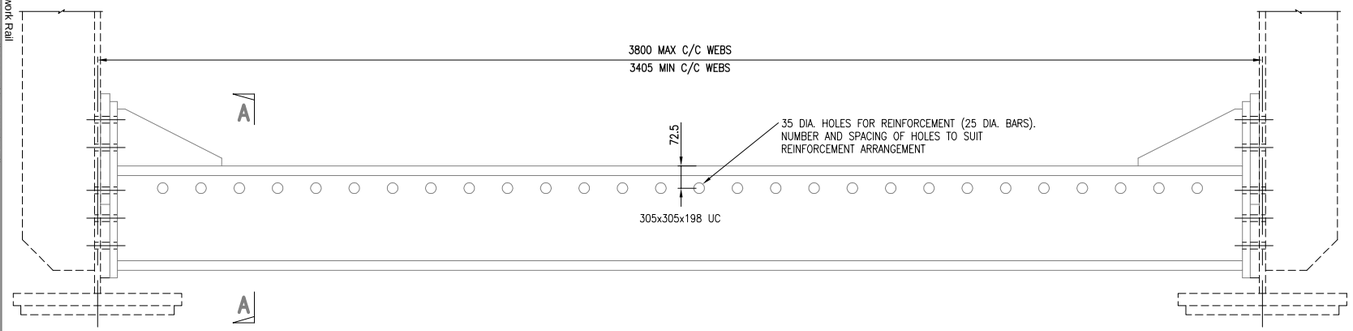

ELEVATION ON CROSS GIRDER (AT U FRAME)

SCALE 1:10

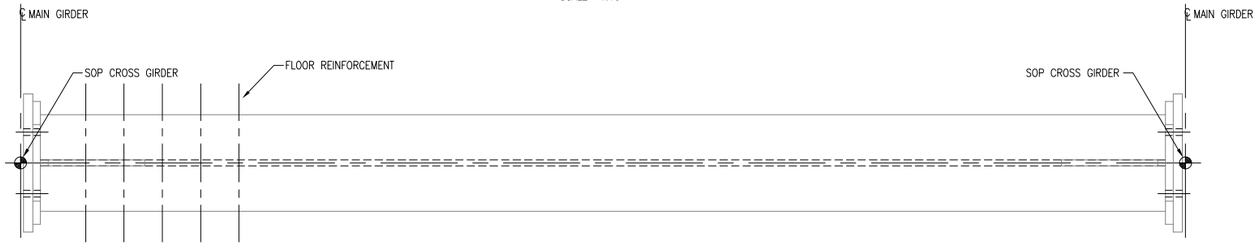

PLAN ON CROSS GIRDER (AT U FRAME)

SCALE 1:10

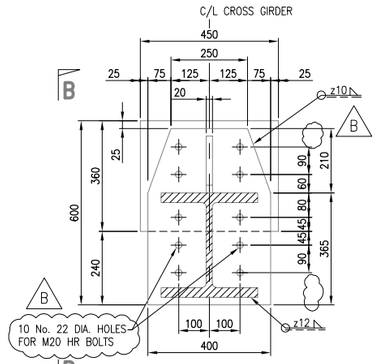

SECTION A–A

SCALE 1:10

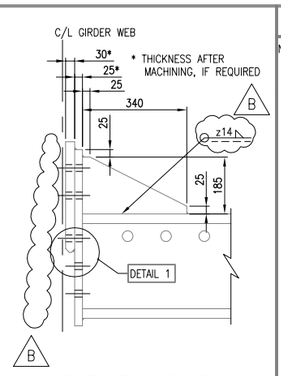

ELEVATION B–B

SCALE 1:10

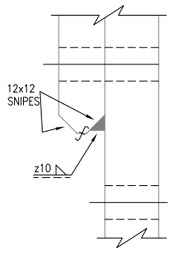

DETAIL 1

SCALE 1:2

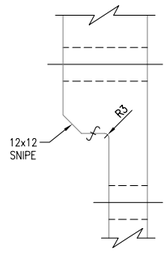

DETAIL 2

SCALE 1:2

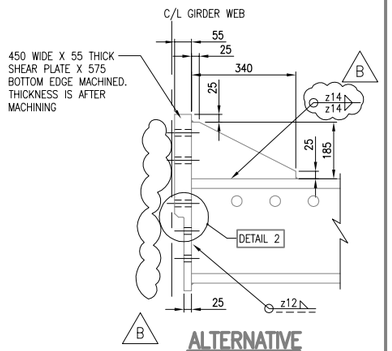

ALTERNATIVE ELEVATION B–B

SCALE 1:10

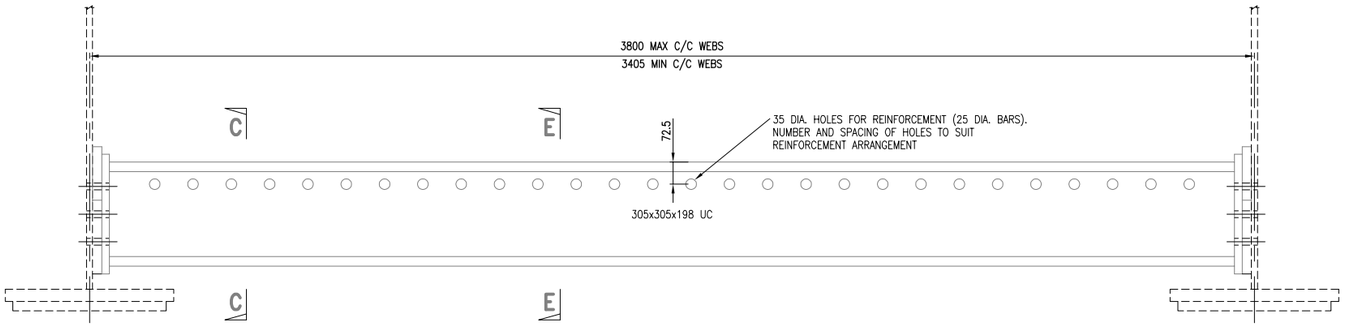

ELEVATION ON CROSS GIRDER (NOT AT U FRAME)

SCALE 1:10

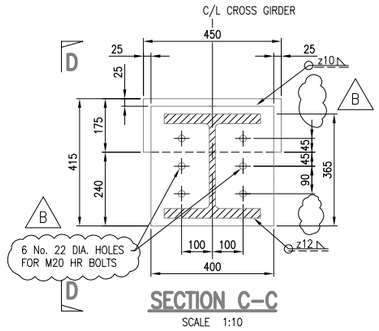

SECTION C–C

SCALE 1:10

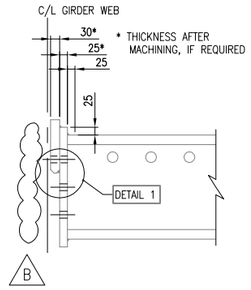

ELEVATION D–D

SCALE 1:10

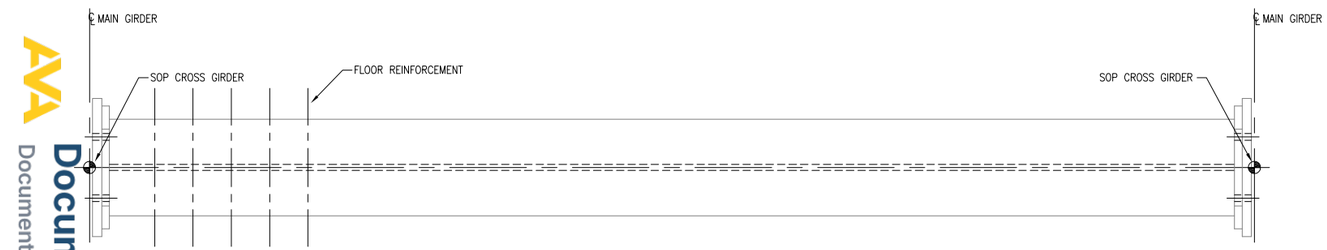

PLAN ON CROSS GIRDER (NOT AT U FRAME)

SCALE 1:10

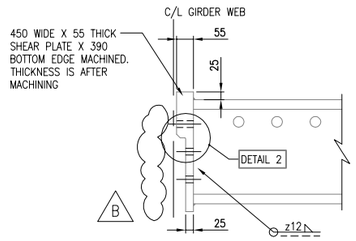

ALTERNATIVE ELEVATION D–D

SCALE 1:10

DRAWING No. NR/CIV/SD/1431

NOTES

1. REFER TO DRAWING NO. NR/CIV/SD/1430 FOR NOTES.
2. SHEAR PLATE TO BE IN POSITIVE CONTACT WITH THE CROSS GIRDER AND POSITIVE CONTACT BETWEEN WEB AND CROSS GIRDER.

Rev	Date	Description of revision	Design'd	C'kd
B	MAY 10	EUROCODE ISSUE	AGW	NY
A	22.12.09	FIRST ISSUE	AGW	NY
P2	09.04.09	INDEPENDENT CHECK	LZ	IP
P1	11.11.08	INDEPENDENT CHECK	LZ	IP

Network Rail

Network Rail Infrastructure Ltd
Registered Office:
Kings Place
90 York Way
London
N1 9AG

Approved	Name	Position	Signature	Date
	Paul Clark	Snr. Proj. Eng. Manager Infrastructure Investment Building and Civils	P.C.	MAY 10

Master copy with original signatures held by Network Rail HQ
CIVIL ENGINEERING STANDARD DESIGN

© COPYRIGHT NETWORK RAIL 2009

'D' TYPE UNDERBRIDGE
STANDARD DRAWINGS

SINGLE TRACK
SQUARE
FILLER BEAM FLOOR
CROSS GIRDER DETAILS

Scale	AS SHOWN	
Drawing Number	NR/CIV/SD/1431	B

AVA Documents
Document Sharing Hub