Supplementary Information

The following information is associated with Network Rail Standard:
**NR CIV/SD/1434** Rev B

## Additional Content Access

Click the link below to access CAD version of this drawing.

### CAD Drawing

- CIV/SD/1434

If you have any questions, or need assistance, please contact **IHS Support**

Information accessed via the links above is the property of the Copyright holder

**IHS Additional Content Page**

--`,,,,,,`,,,,,,`,,`,,,,,,,,`-`-`,,`,,`,`,,`---

Documents
Document Sharing Hub

Copyright Network Rail
Provided by IHS under license with Network Rail
No reproduction or networking permitted without license from IHS
Full document details: NR NR-CIV-SD-1434 ISSUE B 2010

Licensee=Weston Williamson/5989497001, User=sam, albett
Not for Resale, 03/27/2016 21:28:36 MDT

Copyright Network Rail
Provided by IHS under license with Network Rail
No reproduction or networking permitted without license from IHS
Full document details: NR NR-CIV-SD-1434 ISSUE B 2010
Licensee=Weston Williamson5588497001, User=sam_albett
Not for Resale, 03/27/2016 21:28:36 MDT

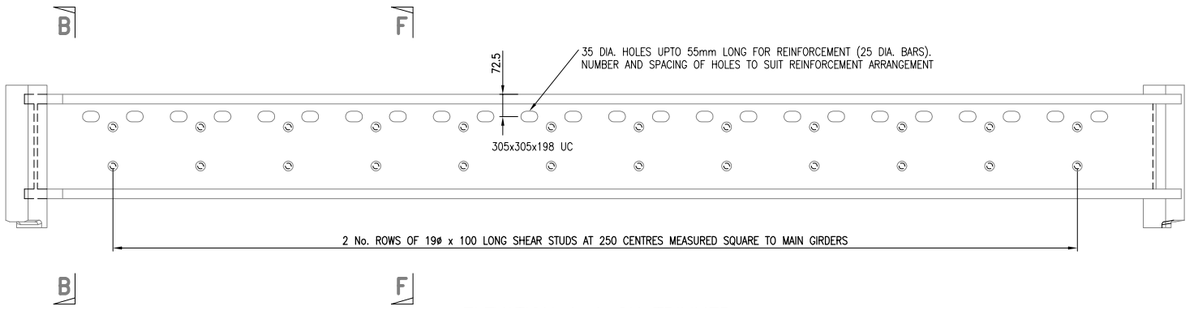


## ELEVATION A–A ON TRIMMER

SCALE 1:10

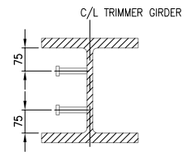


## SECTION F–F

SCALE 1:10

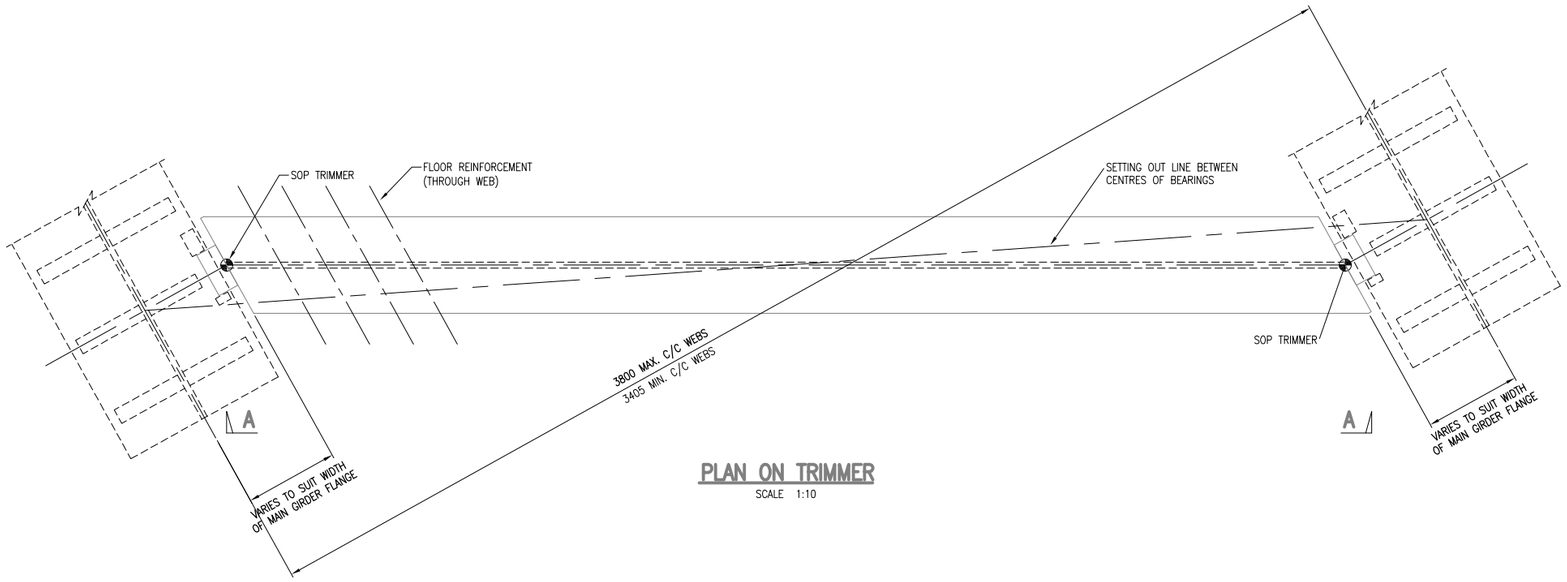


## PLAN ON TRIMMER

SCALE 1:10

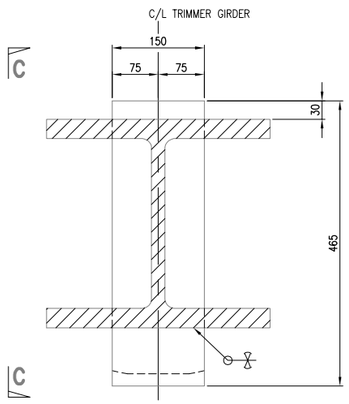


## SECTION B–B

SCALE 1:5

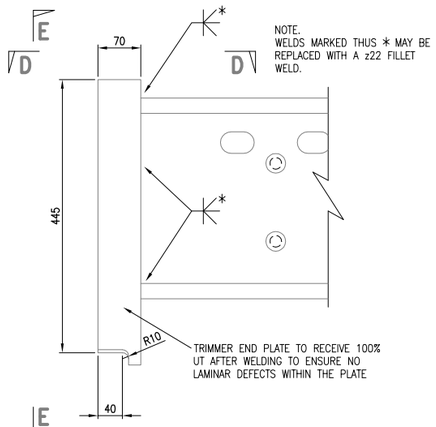


## ELEVATION C–C

SCALE 1:5

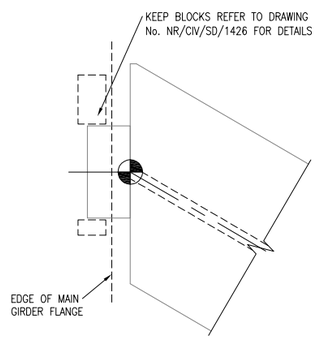


## PLAN ON D–D

SCALE 1:5

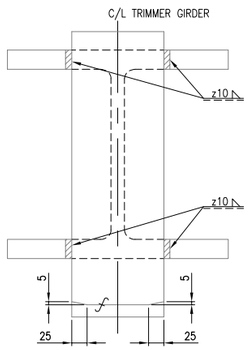


## ELEVATION E–E

SCALE 1:5

DRAWING No. NR/CIV/SD/1434

NOTES

1. REFER TO DRAWING NO. NR/CIV/SD/1430 FOR NOTES.

| Rev | Date | Description of revision | Design'd | C'kd |
|---|---|---|---|---|
| B | MAY 10 | EUROCODE ISSUE | AGW | NY |
| A | 22.12.09 | FIRST ISSUE | AGW | NY |
| P2 | 09.04.09 | INDEPENDENT CHECK | LZ | IP |
| P1 | 11.11.08 | INDEPENDENT CHECK | LZ | IP |

Network Rail

Network Rail Infrastructure Ltd
Registered Office:
Kings Place
90 York Way
London
N1 9AG

| Approved | Paul Clark | Snr. Proj. Eng. Manager Infrastructure Investment Building and Civils | P.C. | MAY 10 |
|---|---|---|---|---|
| | | | | |
| | Name | Position | Signature | Date |

Master copy with original signatures held by Network Rail HQ CIVIL ENGINEERING STANDARD DESIGN

© COPYRIGHT NETWORK RAIL 2009

'D' TYPE UNDERBRIDGE STANDARD DRAWINGS

SINGLE TRACK
0° TO 25°
FILLER BEAM FLOOR
TRIMMER DETAILS

| Scale | AS SHOWN | |
|---|---|---|
| Drawing Number | NR/CIV/SD/1434 | B |

AVA Documents
Document Sharing Hub