Supplementary Information

The following information is associated with Network Rail Standard:
NR CIV/SD/1443 Rev B

Additional Content Access

Click the link below to access CAD version of this drawing.

CAD Drawing

- CIV/SD/1443

If you have any questions, or need assistance, please contact **IHS Support**

Information accessed via the links above is the property of the Copyright holder

IHS Additional Content Page

--`,,,,,,`,,,,,,`,,`,,,,,,,,`-`-`,,`,,`,`,,`---

Documents
Document Sharing Hub

Copyright Network Rail
Provided by IHS under license with Network Rail
No reproduction or networking permitted without license from IHS
Full document details: NR NR-CIV-SD-1443 ISSUE B 2010

Licensee=Weston Williamson/5989497001, User=sam, albett
Not for Resale, 03/27/2016 21:32:32 MDT

Copyright Network Rail
Provided by IHS under license with Network Rail
No reproduction or networking permitted without license from IHS
Full document details: NR NR-CIV-SD-1443 ISSUE B 2010

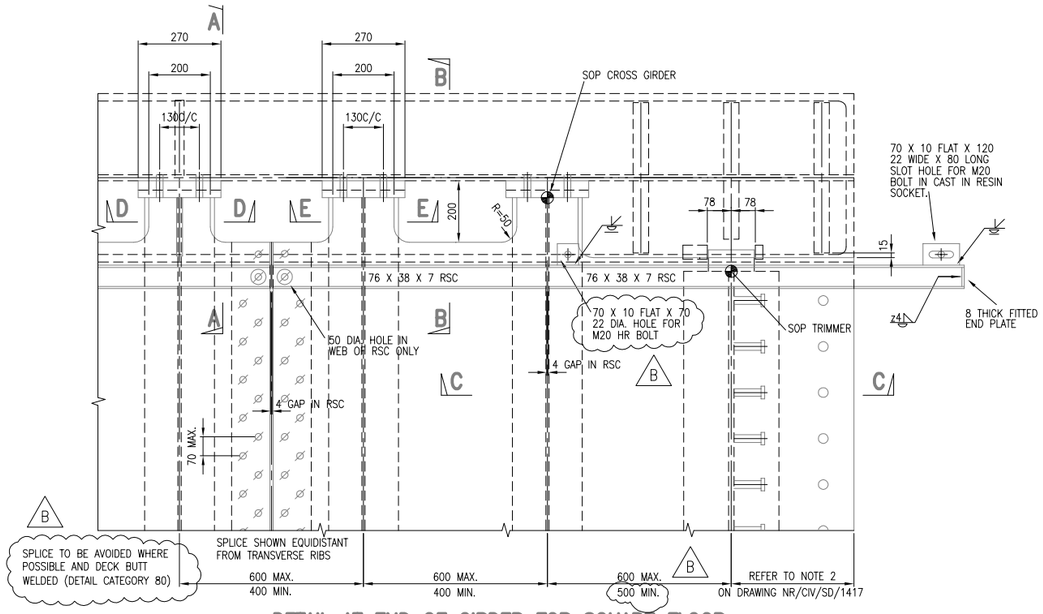

DETAIL AT END OF GIRDER FOR SQUARE FLOOR

SCALE 1:10

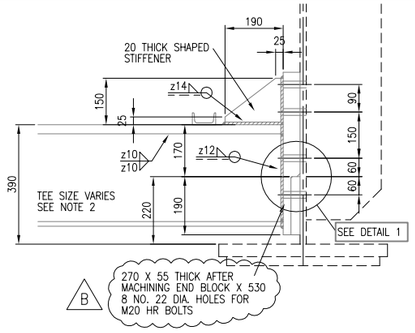

SECTION A–A (AT U FRAME)

SCALE 1:10

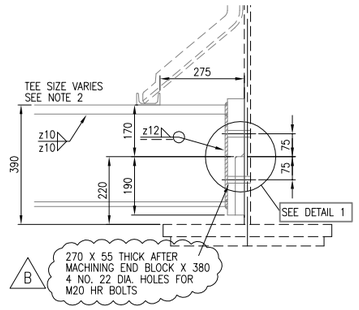

SECTION B–B (NOT AT U FRAME)

SCALE 1:10

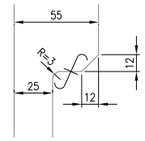

DETAIL 1

SCALE 1:2

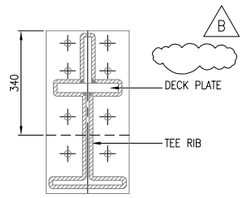

SECTION D–D

SCALE 1:10

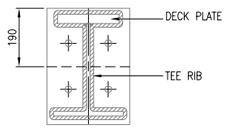

SECTION E–E

SCALE 1:10

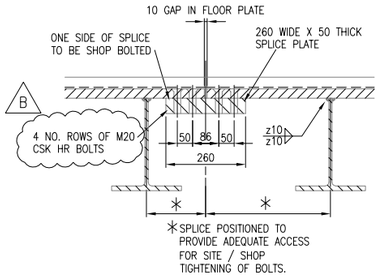

SPLICE DETAIL

SPLICE SHOWN AT MAX. OFFSET AT ⅓ – ⅔ DISTANCE BETWEEN TRANSVERSE RIBS

SCALE 1:10

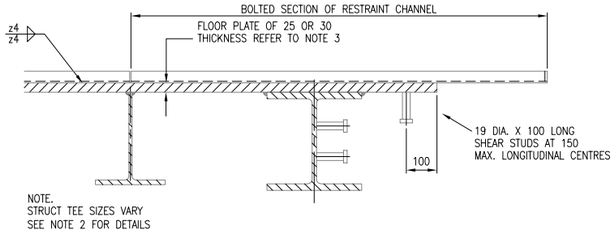

SECTION C–C

SCALE 1:10

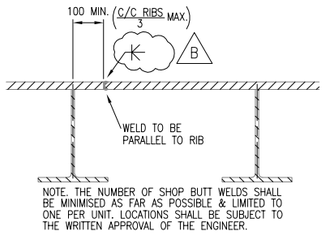

LOCATION OF FLOOR PLATE SHOP BUTT WELD (IF REQUIRED)

SCALE 1:10

DRAWING No. NR/CIV/SD/1443

NOTES

1. REFER TO DRAWING NO. NR/CIV/SD/1430 FOR NOTES
2. SHEAR PLATE TO BE IN POSITIVE CONTACT WITH THE TRANSVERSE RIB AND POSITIVE CONTACT BETWEEN WEB AND TRANSVERSE RIB.
3. SEE TABLE BELOW FOR SELECTION OF HEAVY FLOOR AND LIGHT FLOOR.

TRAFFIC \ ANNUAL TONNAGE $\times 10^6$	42–27	27–18	18–12	12–7
25t axles	HEAVY			
EC Mix				LIGHT
Type 9 MUs				

B 210 X 267 X 46 STRUCT TEE FOR LIGHT
229 X 305 X 51 STRUCT TEE FOR HEAVY
FLOOR PLATE 25mm THICK FOR LIGHT
FLOOR PLATE 30mm THICK FOR HEAVY

Rev	Date	Description of revision	Design'd	C'kd
B	MAY 10	EUROCODE ISSUE	AGW	NY
A	22.12.09	FIRST ISSUE	AGW	NY
P2	09.04.09	INDEPENDENT CHECK	DG	IP
P1	04.02.09	INDEPENDENT CHECK	DG	IP

Network Rail

Network Rail Infrastructure Ltd
Registered Office:
Kings Place
90 York Way
London
N1 9AG

Approved	Name	Position	Signature	Date
	Paul Clark	Snr. Proj. Eng. Manager Infrastructure Investment Building and Civils	P.C.	MAY 10

Master copy with original signatures held by Network Rail HQ CIVIL ENGINEERING STANDARD DESIGN

© COPYRIGHT NETWORK RAIL 2009

'D' TYPE UNDERBRIDGE STANDARD DRAWINGS

SINGLE TRACK SQUARE STEEL FLOOR TRANSVERSE RIB DETAILS

Scale: AS SHOWN

Drawing Number: NR/CIV/SD/1443 B

Licensee=Weston Williamson/5989497001, User=sam, albert
Not for Resale, 03/27/2016 21:32:32 MDT
Documents
Document Sharing Hub