Supplementary Information

The following information is associated with Network Rail Standard:
NR CIV/SD/1447 Rev B

Additional Content Access

Click the link below to access CAD version of this drawing.

CAD Drawing

- CIV/SD/1447

If you have any questions, or need assistance, please contact **IHS Support**

Information accessed via the links above is the property of the Copyright holder

IHS Additional Content Page

Documents
Document Sharing Hub

Copyright Network Rail
Provided by IHS under license with Network Rail
No reproduction or networking permitted without license from IHS
Full document details: NR NR-CIV-SD-1447 ISSUE B 2010

Licensee=Weston Williamson/5989497001, User=sam, albett
Not for Resale, 03/27/2016 21:33:13 MDT

Copyright Network Rail
Provided by IHS under license with Network Rail
No reproduction or networking permitted without license from IHS
Full document details: NR NR-CIV-SD-1447 ISSUE B 2010
Licensee=Weston Williamson/5989497001, User=sam.albett
Not for Resale, 03/27/2016 21:33:13 MDT

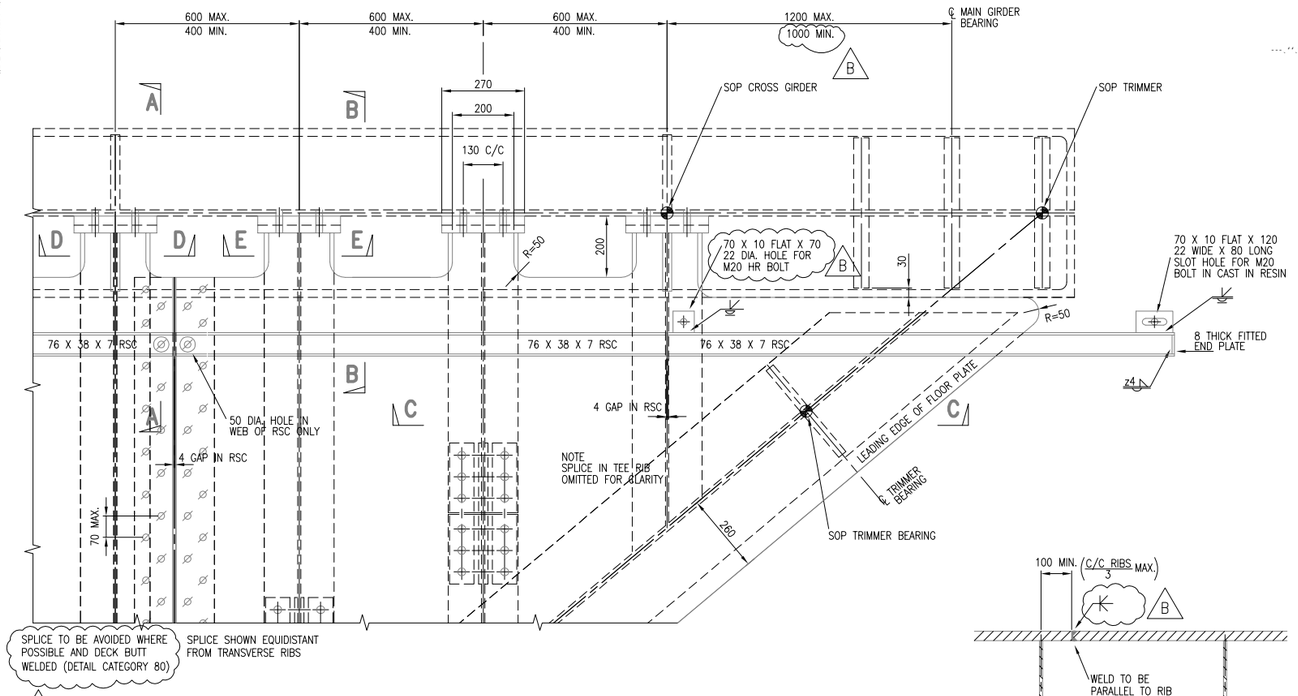

DETAIL AT ACUTE END OF GIRDER FOR 25° TO 50° FLOOR SKEW

SCALE 1:10

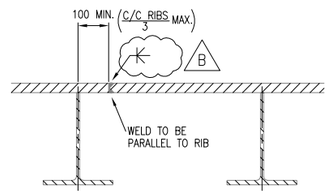

NOTE. THE NUMBER OF SHOP BUTT WELDS SHALL BE MINIMISED AS FAR AS POSSIBLE & LIMITED TO ONE PER UNIT. LOCATIONS SHALL BE SUBJECT TO THE WRITTEN APPROVAL OF THE ENGINEER.

LOCATION OF FLOOR PLATE SHOP BUTT WELD (IF REQUIRED)

SCALE 1:10

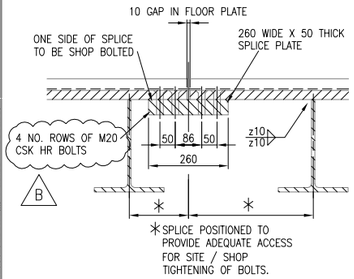

SPLICE DETAIL

SPLICE SHOWN AT MAX.
OFFSET AT ⅓ – ⅔ DISTANCE
BETWEEN TRANSVERSE RIBS

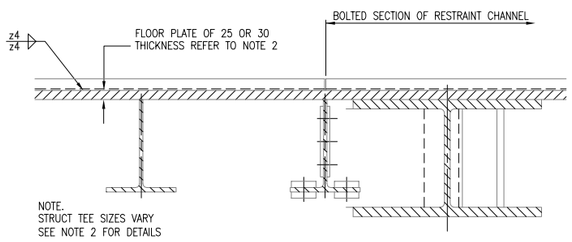

SECTION C–C

SCALE 1:10

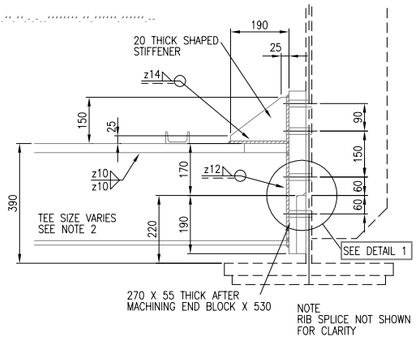

SECTION A–A (AT U FRAME)

SCALE 1:10

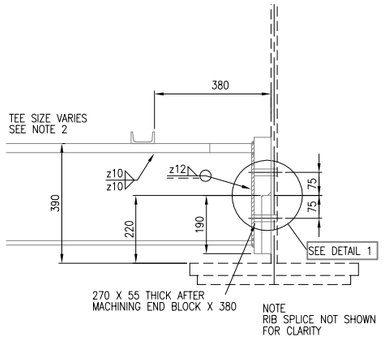

SECTION B–B (NOT AT U FRAME)

SCALE 1:10

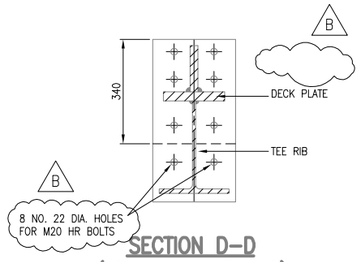

SECTION D–D (AT U OR L FRAME)

SCALE 1:10

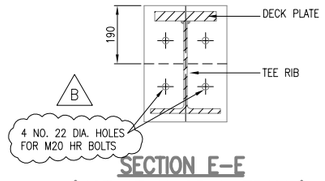

SECTION E–E (NOT AT U OR L FRAME)

SCALE 1:10

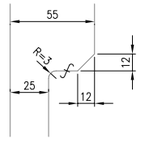

DETAIL 1

SCALE 1:2

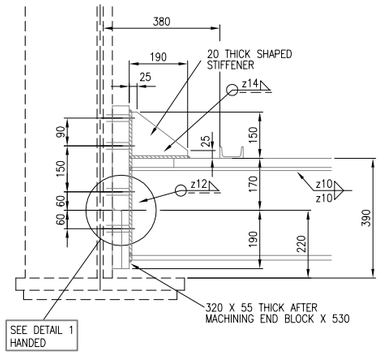

SECTION F–F

SCALE 1:10

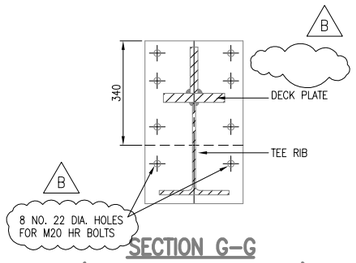

SECTION G–G (AT BEARING STIFFENER)

SCALE 1:10

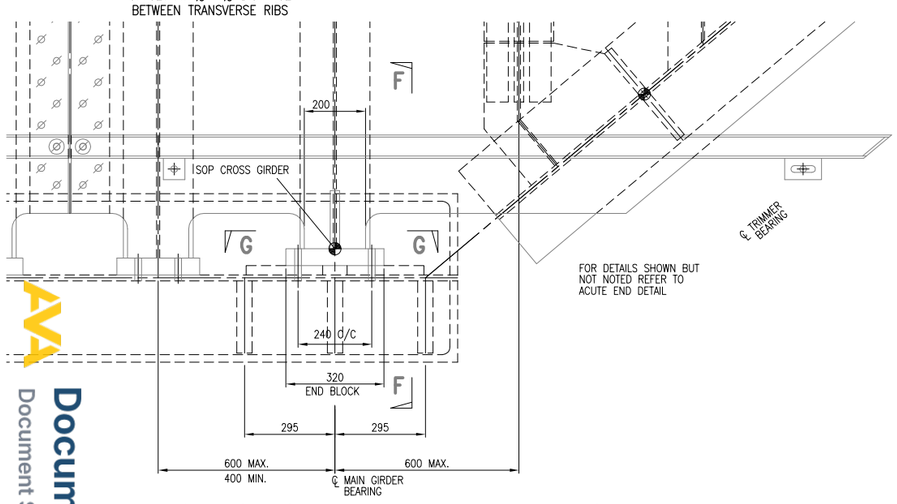

DETAIL AT OBTUSE END OF GIRDER FOR 25° TO 50° FLOOR SKEW

SCALE 1:10

DRAWING No. NR/CIV/SD/1447

NOTES

1. REFER TO DRAWING NO. NR/CIV/SD/1430 FOR NOTES
2. SHEAR PLATE TO BE IN POSITIVE CONTACT WITH THE TRANSVERSE RIB AND POSITIVE CONTACT BETWEEN WEB AND TRANSVERSE RIB.
3. SEE TABLE BELOW FOR SELECTION OF HEAVY GIRDERS AND LIGHT FLOORS.

ANNUAL TONNAGE ×10⁶ / TRAFFIC	42–27	27–18	18–12	12–7
25t axles	HEAVY			LIGHT
EC Mix				
Type 9 MUs				

B

229 X 305 X 51 STRUCT TEE FOR LIGHT
229 X 305 X 70 STRUCT TEE FOR HEAVY
FLOOR PLATE 25MM THICK FOR LIGHT
FLOOR PLATE 30MM THICK FOR HEAVY

Rev	Date	Description of revision	Design'd	C'kd
B	MAY 10	EUROCODE ISSUE	AGW	NY
A	22.12.09	FIRST ISSUE	AGW	NY
P2	09.04.09	INDEPENDENT CHECK	DG	IP

Network Rail

Network Rail Infrastructure Ltd
Registered Office:
Kings Place
90 York Way
London
N1 9AG

Approved	Name	Position	Signature	Date
	Paul Clark	Snr. Proj. Eng. Manager Infrastructure Investment Building and Civils	P.C.	MAY 10

Master copy with original signatures held by Network Rail HQ CIVIL ENGINEERING STANDARD DESIGN

© COPYRIGHT NETWORK RAIL 2009

'D' TYPE UNDERBRIDGE STANDARD DRAWINGS

SINGLE TRACK
25° TO 50° STEEL FLOOR
TRANSVERSE RIB DETAILS

Scale	AS SHOWN	
Drawing Number	NR/CIV/SD/1447	B

AVA Documents
Document Sharing Hub