Supplementary Information

The following information is associated with Network Rail Standard:
NR CIV/SD/1448 Rev B

Additional Content Access

Click the link below to access CAD version of this drawing.

CAD Drawing

- CIV/SD/1448

If you have any questions, or need assistance, please contact **IHS Support**

Information accessed via the links above is the property of the Copyright holder

IHS Additional Content Page

Documents
Document Sharing Hub

Copyright Network Rail
Provided by IHS under license with Network Rail
No reproduction or networking permitted without license from IHS
Full document details: NR NR-CIV-SD-1448 ISSUE B 2010

Licensee=Weston Williamson/5989497001, User=sam, albett
Not for Resale, 03/27/2016 21:32:26 MDT

Copyright Network Rail
Provided by IHS under license with Network Rail
No reproduction or networking permitted without license from IHS
Full document details: NR NR-CIV-SD-1448 ISSUE B 2010
Licensee=Weston Williamson/5989497001, User=sam.albett
Not for Resale, 03/27/2016 21:32:26 MDT

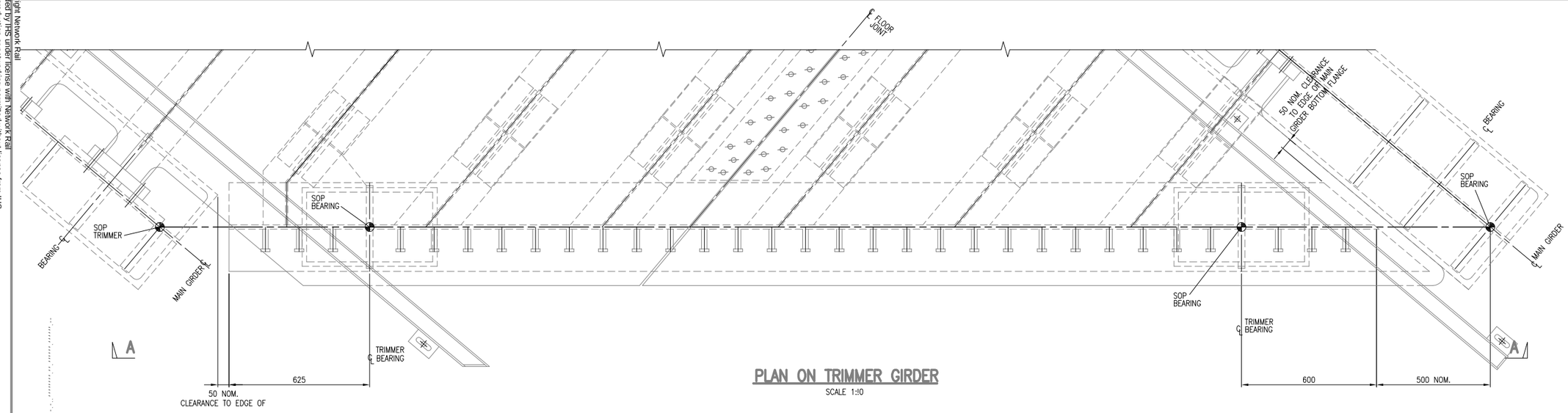

PLAN ON TRIMMER GIRDER

SCALE 1:10

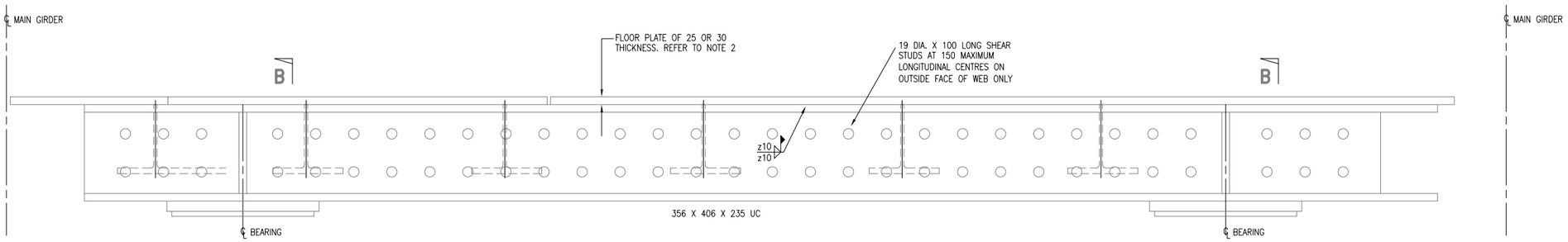

ELEVATION A–A ON TRIMMER GIRDER

SCALE 1:10

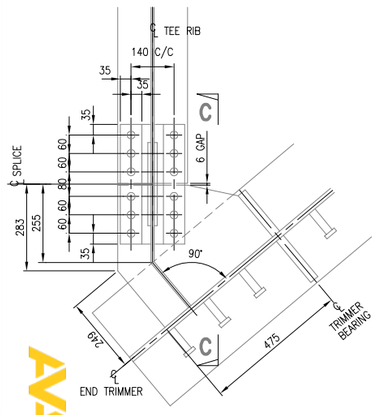

TEE RIB TO END TRIMMER 43° TO 50° SKEW (50° SHOWN)

SCALE 1:10

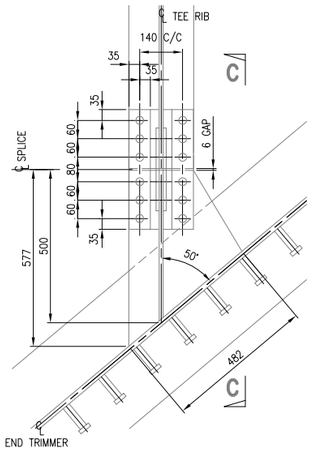

TEE RIB TO END TRIMMER 43° TO 50° SKEW (50° SHOWN)

SCALE 1:10

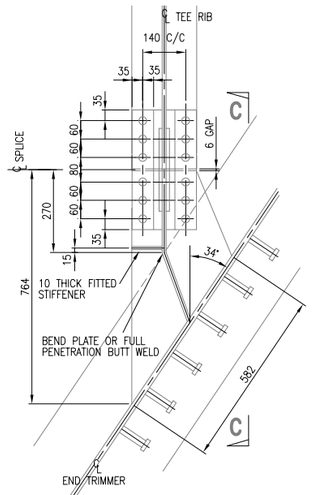

TEE RIB TO END TRIMMER 34° TO 42° SKEW (34° SHOWN)

SCALE 1:10

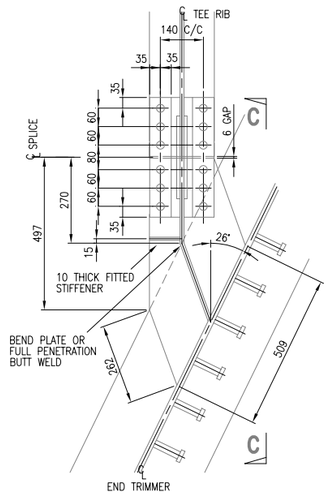

TEE RIB TO END TRIMMER 26° TO 33° SKEW (26° SHOWN)

SCALE 1:10

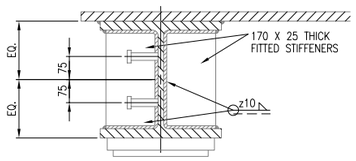

SECTION B–B

SCALE 1:10

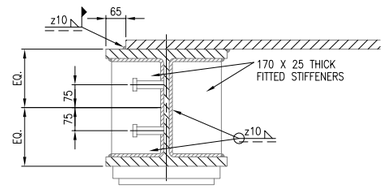

ALTERNATIVE SECTION B–B

SCALE 1:10

NOTE:
ALTERNATIVE ARRANGEMENT MAY BE USED TO SUIT TRIMMER END AND CONSTRUCTION REQUIREMENTS

NOTE.
MAKE UP LENGTH OF TEE RIB FABRICATED FROM SAME SIZE SECTION AS RIB OR PLATES OF SIMILAR PROPERTIES TO TEE SECTION WELDED TOGETHER

NOTE.
THE WELD PREPARATION TO END OF RIB IS SHOWN FOR EASE OF ACCESS/FABRICATION. THE MINIMUM SIZE OF WELD REQUIRED IS A z10 FILLET. NOT TO BE TESTED AS A BUTT WELD.

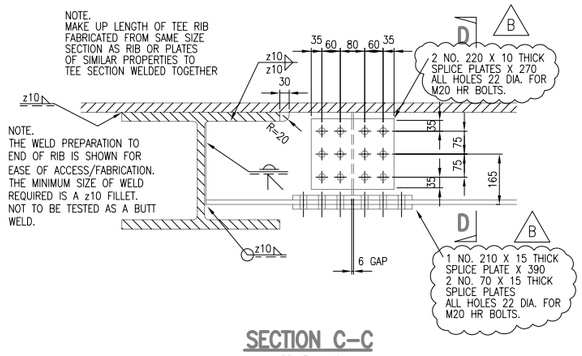

SECTION C–C

SCALE 1:10

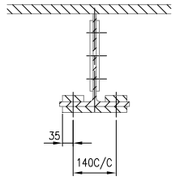

SECTION D–D

SCALE 1:10

DRAWING No. NR/CIV/SD/1448

NOTES

1. REFER TO DRAWING NO. NR/CIV/SD/1430 FOR NOTES.

Rev	Date	Description of revision	Design'd	C'kd
B	MAY 10	EUROCODE ISSUE	AGW	NY
A	22.12.09	FIRST ISSUE	AGW	NY
P2	09.04.09	INDEPENDENT CHECK	DG	IP

Network Rail

Network Rail Infrastructure Ltd
Registered Office:
Kings Place
90 York Way
London
N1 9AG

Approved	Name	Position	Signature	Date
	Paul Clark	Snr. Proj. Eng. Manager Infrastructure Investment Building and Civils	P.C.	MAY 10

Master copy with original signatures held by Network Rail HQ CIVIL ENGINEERING STANDARD DESIGN

© COPYRIGHT NETWORK RAIL 2009

'D' TYPE UNDERBRIDGE STANDARD DRAWINGS

SINGLE TRACK
25° TO 50° STEEL FLOOR TRIMMER GIRDER DETAILS

Scale: AS SHOWN

Drawing Number: NR/CIV/SD/1448 B

AVA Documents
Document Sharing Hub