Supplementary Information

The following information is associated with Network Rail Standard:
NR CIV/SD/1470 Rev B

Additional Content Access

Click the link below to access CAD version of this drawing.

CAD Drawing

- CIV/SD/1470

If you have any questions, or need assistance, please contact **IHS Support**

Information accessed via the links above is the property of the Copyright holder

IHS Additional Content Page

--`,,,,,,`,,,,,,`,,`,,,,,,,,``-`-`,,`,,`,`,,`---

Documents
Document Sharing Hub

Copyright Network Rail
Provided by IHS under license with Network Rail
No reproduction or networking permitted without license from IHS
Full document details: NR NR-CIV-SD-1470 ISSUE B 2010

Licensee=Weston Williamson/5989497001, User=sam, albett
Not for Resale, 03/27/2016 21:32:29 MDT

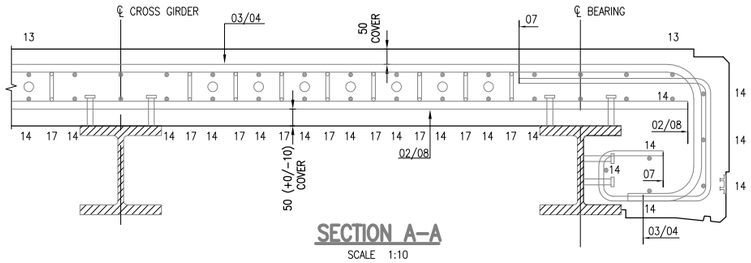

SECTION A–A
SCALE 1:10

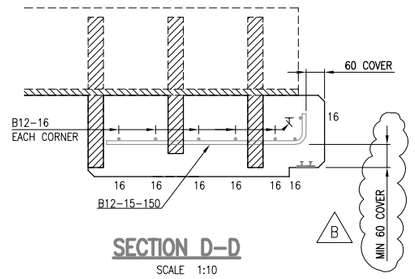

SECTION D–D
SCALE 1:10

BM	SHAPE CODE
01	00
02	00
03	21
04	21
05	00
06	NOT USED
07	41
08	00
09	NOT USED
10	NOT USED
11	13
12	NOT USED
13	00
14	00
15	11
16	00
17	13

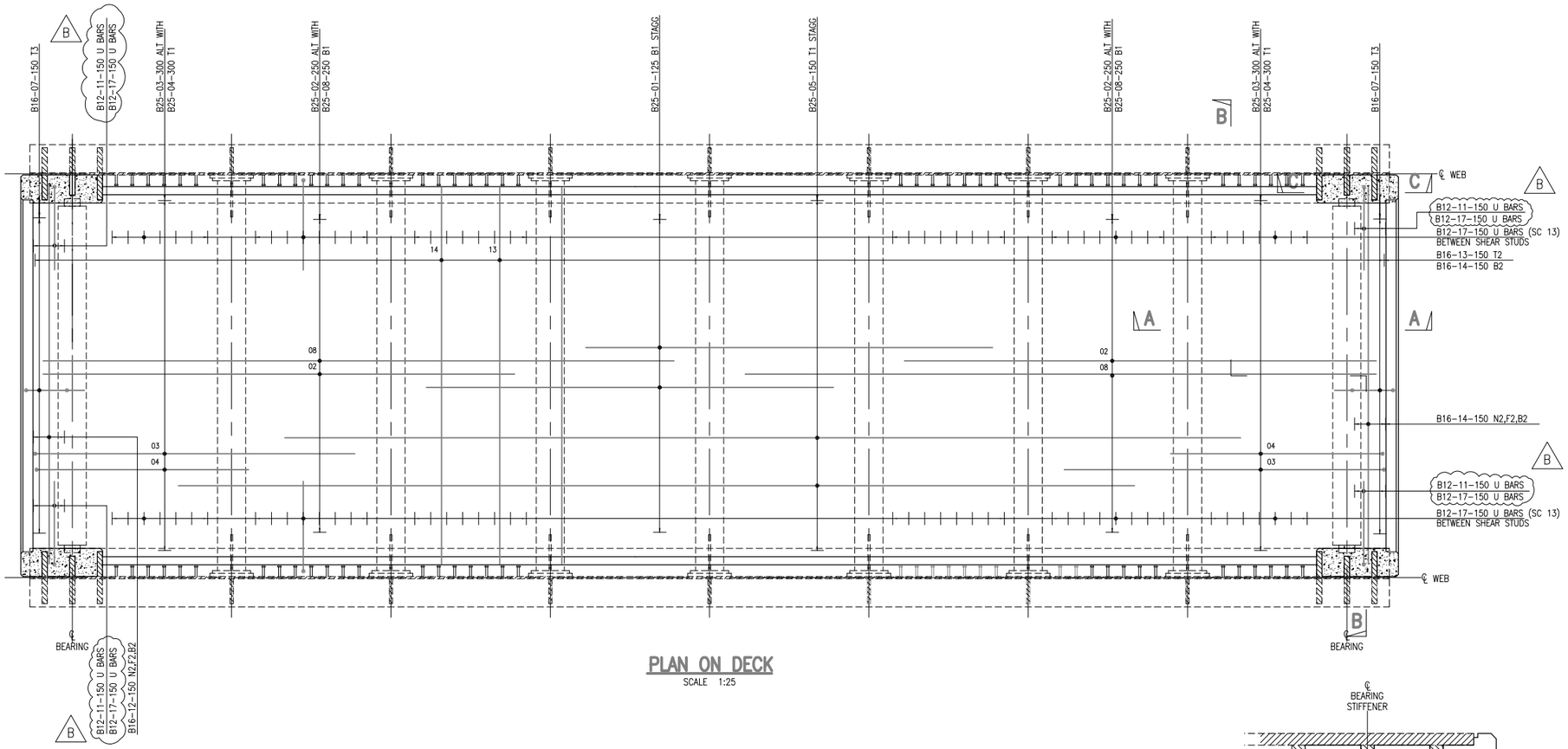

PLAN ON DECK
SCALE 1:25

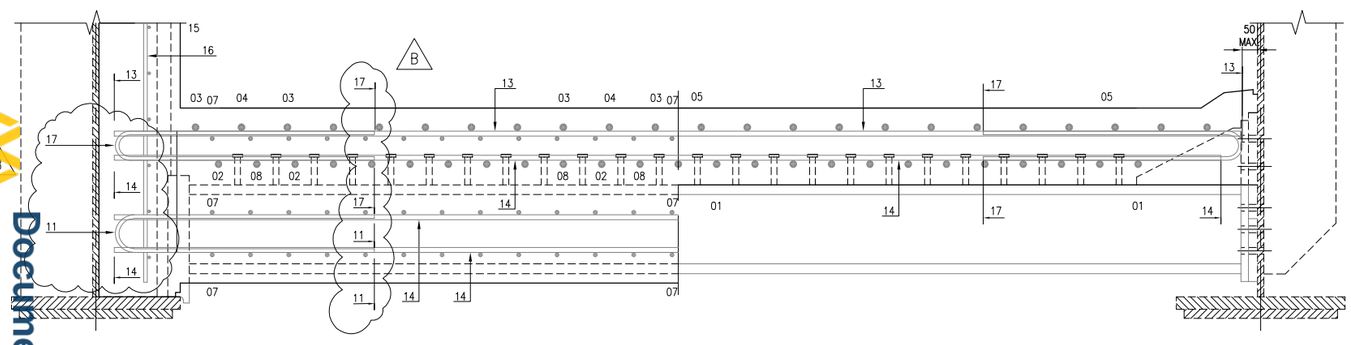

SECTION B–B
SCALE 1:10

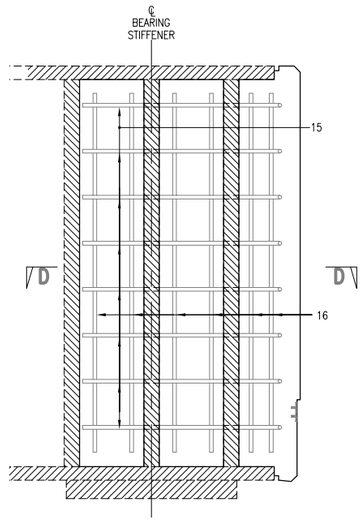

SECTIONAL ELEVATION ON C–C
SCALE 1:10

DRAWING No. NR/CIV/SD/1470

NOTES

1. REFER TO DRAWING NO. NR/CIV/SD/1460 FOR NOTES.

Rev	Date	Description of revision	Design'd	C'kd
B	MAY 10	EUROCODE ISSUE	AGW	NY
A	22.12.09	FIRST ISSUE	AGW	NY
P2	28.04.09	INDEPENDENT CHECK	LZ	IP
P1	14.11.08	INDEPENDENT CHECK	LZ	IP

Network Rail Infrastructure Ltd
Registered Office:
Kings Place
90 York Way
London
N1 9AG

Approved	Paul Clark	Snr. Proj. Eng. Manager Infrastructure Investment Building and Civils	P.C.	MAY 10
	Name	Position	Signature	Date

Master copy with original signatures held by Network Rail HQ
CIVIL ENGINEERING STANDARD DESIGN

© COPYRIGHT NETWORK RAIL 2009

'D' TYPE UNDERBRIDGE STANDARD DRAWINGS

REINFORCEMENT DETAILS FOR SQUARE COMPOSITE FLOOR

Scale: AS SHOWN

Drawing Number: NR/CIV/SD/1470 B

Copyright Network Rail
Provided by IHS under license with Network Rail
No reproduction or networking permitted without license from IHS
Full document details: NR NR-CIV-SD-1470 ISSUE B 2010
Licensee=Weston Williamson/5989497001, User=sam, albett
Not for Resale, 03/27/2016 21:32:29 MDT
Documents
Document Sharing Hub