Supplementary Information

The following information is associated with Network Rail Standard:
NR CIV/SD/1472 Rev B

Additional Content Access

Click the link below to access CAD version of this drawing.

CAD Drawing

- CIV/SD/1472

If you have any questions, or need assistance, please contact **IHS Support**

Information accessed via the links above is the property of the Copyright holder

IHS Additional Content Page

Documents
Document Sharing Hub

Copyright Network Rail
Provided by IHS under license with Network Rail
No reproduction or networking permitted without license from IHS
Full document details: NR NR-CIV-SD-1472 ISSUE B 2010

Licensee=Weston Williamson/5989497001, User=sam, albett
Not for Resale, 03/27/2016 21:37:26 MDT

Copyright Network Rail
Provided by IHS under license with Network Rail
No reproduction or networking permitted without license from IHS
Full document details: NR NR-CIV-SD-1472 ISSUE B 2010
Licensee=Weston Williamson/5989497001, User=sam. albett
Not for Resale, 03/27/2016 21:37:26 MDT

DRAWING No. NR/CIV/SD/1472

NOTES

1. REFER TO DRAWING NO. NR/CIV/SD/1460 FOR NOTES.

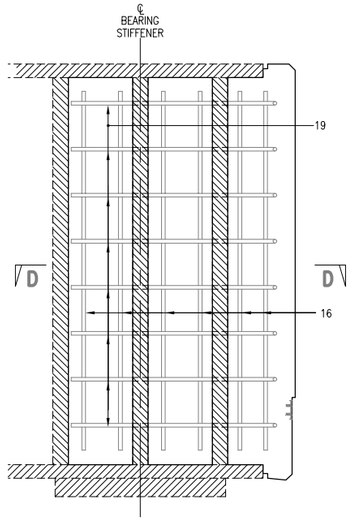

SECTIONAL ELEVATION ON C–C
SCALE 1:10

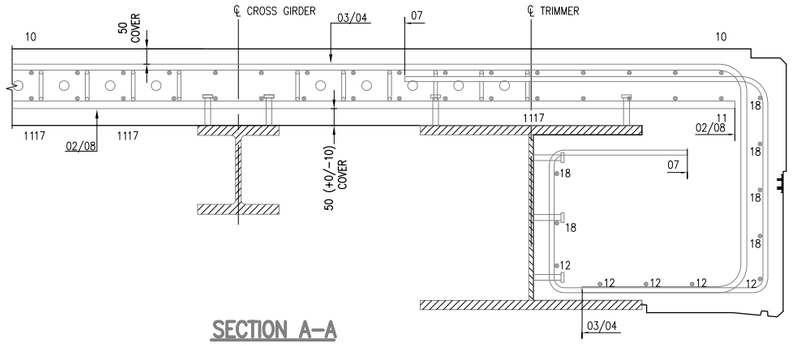

SECTION A–A
SCALE 1:10

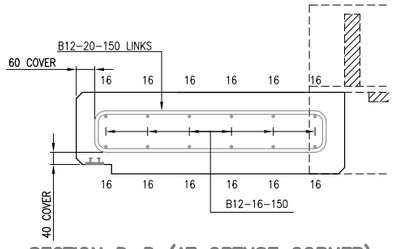

SECTION D–D (AT OBTUSE CORNER)
SCALE 1:10

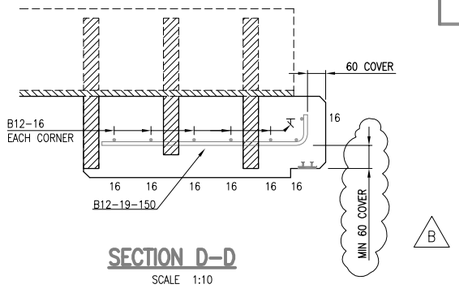

SECTION D–D
SCALE 1:10

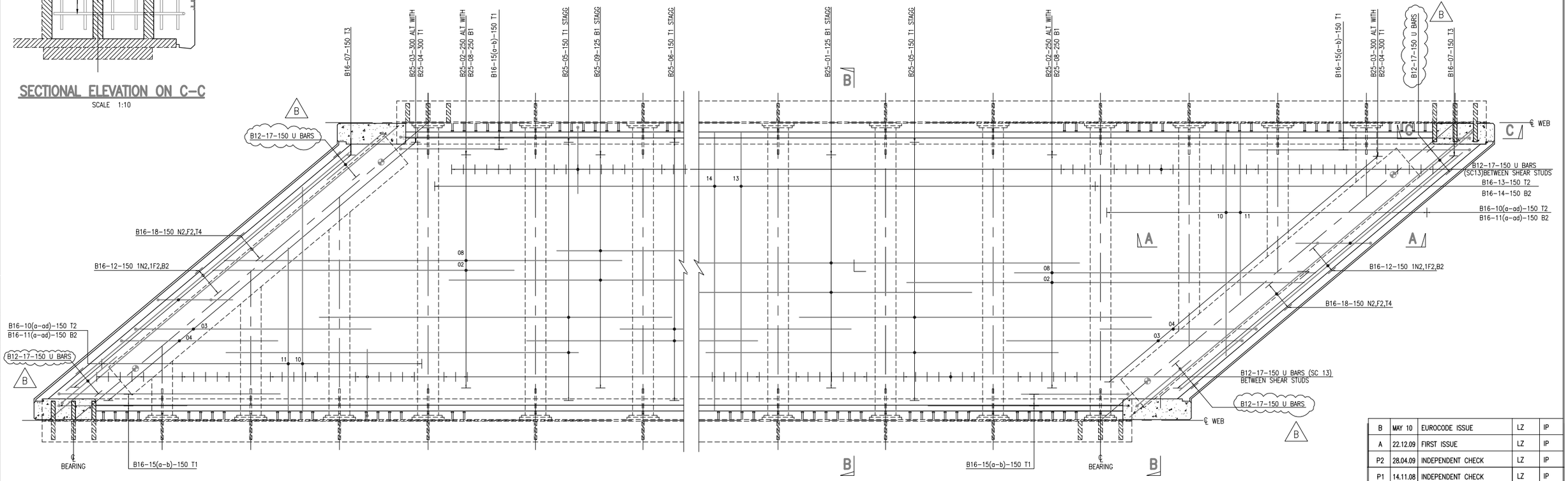

PLAN ON DECK
SCALE 1:25

PLAN ON DECK CONT.
SCALE 1:25

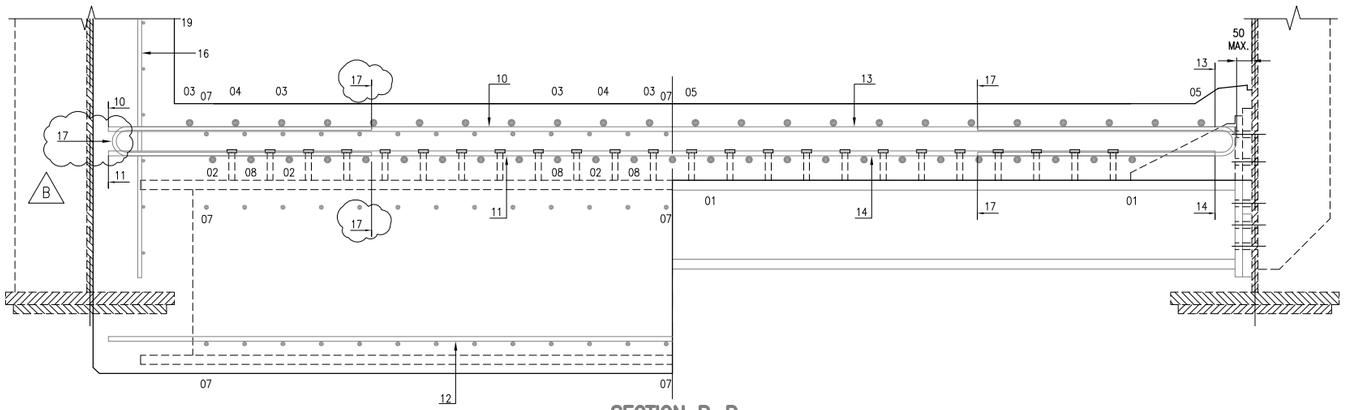

SECTION B–B
SCALE 1:10

BM	SHAPE CODE	BM	SHAPE CODE
01	00	11	00
02	00	12	00
03	21	13	00
04	21	14	00
05	00	15	11
06	00	16	00
07	41	17	13
08	00	18	00
09	00	19	11
10	00	20	51

Rev	Date	Description of revision	Design'd	C'kd
B	MAY 10	EUROCODE ISSUE	LZ	IP
A	22.12.09	FIRST ISSUE	LZ	IP
P2	28.04.09	INDEPENDENT CHECK	LZ	IP
P1	14.11.08	INDEPENDENT CHECK	LZ	IP

Network Rail

Network Rail Infrastructure Ltd
Registered Office:
Kings Place
90 York Way
London
N1 9AG

Approved	Name	Position	Signature	Date
	Paul Clark	Snr. Proj. Eng. Manager Infrastructure Investment Building and Civils	P.C.	MAY 10

Master copy with original signatures held by Network Rail HQ CIVIL ENGINEERING STANDARD DESIGN

© COPYRIGHT NETWORK RAIL 2009

'D' TYPE UNDERBRIDGE STANDARD DRAWINGS

REINFORCEMENT DETAILS FOR 25° TO 50° COMPOSITE FLOORS

Scale: AS SHOWN

Drawing Number: NR/CIV/SD/1472 B

AVA Documents
Document Sharing Hub