Supplementary Information

The following information is associated with Network Rail Standard:
NR CIV/SD/1474 Rev B

Additional Content Access

Click the link below to access CAD version of this drawing.

CAD Drawing

- CIV/SD/1474

If you have any questions, or need assistance, please contact **IHS Support**

Information accessed via the links above is the property of the Copyright holder

IHS Additional Content Page

--`,,,,,,`,,,,,,`,,`,,,,,,,,`-`-`,,`,,`,`,,`---

Documents
Document Sharing Hub

Copyright Network Rail
Provided by IHS under license with Network Rail
No reproduction or networking permitted without license from IHS
Full document details: NR NR-CIV-SD-1474 ISSUE B 2010

Licensee=Weston Williamson/5989497001, User=sam, albett
Not for Resale, 03/27/2016 21:32:37 MDT

Copyright Network Rail
Provided by IHS under license with Network Rail
No reproduction or networking permitted without license from IHS
Full document details: NR NR-CIV-SD-1474 ISSUE B 2010
Licensee=Weston Williamson/5989497001, User=sam.albett
Not for Resale, 03/27/2016 21:32:37 MDT

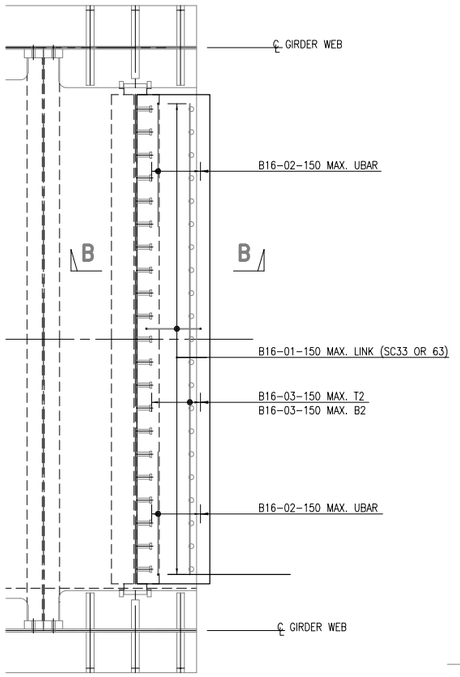

SECTIONAL PLAN ON SQUARE DECK OTHER END HANDED

SCALE 1:20

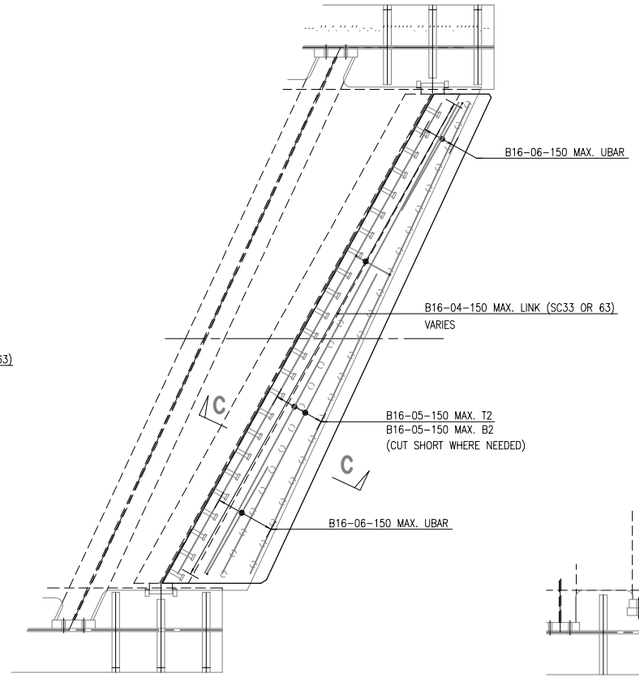

SECTIONAL PLAN ON DECK SKEW 0° TO 25°

SCALE 1:20

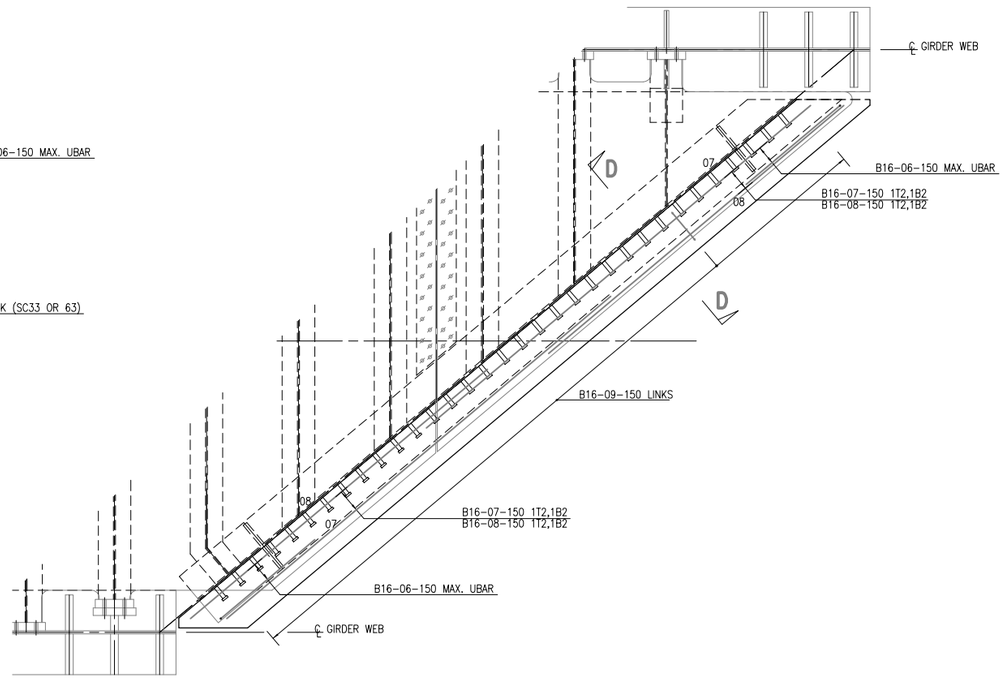

SECTIONAL PLAN ON DECK SKEW 25° TO 50°

SCALE 1:20

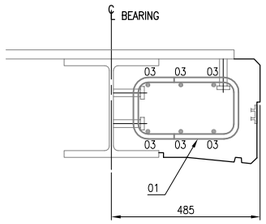

SECTION B–B

SCALE 1:10

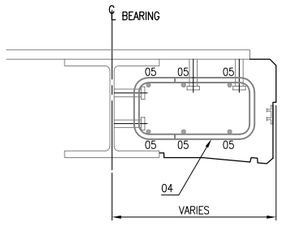

SECTION C–C

SCALE 1:10

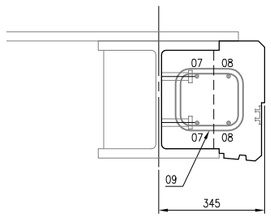

SECTION D–D

SCALE 1:10

DRAWING No. NR/CIV/SD/1474

NOTES

1. REFER TO DRAWING NO. NR/CIV/SD/1460 FOR NOTES.

BM	SHAPE CODE
01	51
02	21
03	00
04	51
05	00
06	21
07	00
08	00
09	00
10	–
11	21
12	12

Rev	Date	Description of revision	Design'd	C'kd
B	MAR 10	EUROCODE ISSUE	DG	IP
A	22.12.09	FIRST ISSUE	DG	IP
P1	00.04.09	REVISED WHERE SHOWN	DG	IP
P1	04.02.09	INDEPENDENT CHECK	DG	IP

Network Rail

Network Rail Infrastructure Ltd
Registered Office:
Kings Place
90 York Way
London
N1 9AG

	Name	Position	Signature	Date
Approved	Paul Clark	Snr. Proj. Eng. Manager Infrastructure Investment Building and Civils	P.C.	MAY 10

Master copy with original signatures held by Network Rail HQ CIVIL ENGINEERING STANDARD DESIGN

© COPYRIGHT NETWORK RAIL 2009

'D' TYPE UNDERBRIDGE STANDARD DRAWINGS

REINFORCEMENT DETAILS FOR SINGLE TRACK STEEL FLOOR

B

Scale: AS SHOWN

Drawing Number: NR/CIV/SD/1474 B

AVA Documents
Document Sharing Hub