Supplementary Information

The following information is associated with Network Rail Standard:
NR CIV/SD/1514 Rev B

Additional Content Access

Click the link below to access CAD version of this drawing.

CAD Drawing

- CIV/SD/1514

If you have any questions, or need assistance, please contact **IHS Support**

Information accessed via the links above is the property of the Copyright holder

IHS Additional Content Page

Documents
Document Sharing Hub

Copyright Network Rail
Provided by IHS under license with Network Rail
No reproduction or networking permitted without license from IHS
Full document details: NR NR-CIV-SD-1514 ISSUE B 2010

Licensee=Weston Williamson/5989497001, User=sam, albett
Not for Resale, 03/27/2016 21:27:56 MDT

Copyright Network Rail
Provided by IHS under license with Network Rail
No reproduction or networking permitted without license from IHS
Full document details: NR NR-CIV-SD-1514 ISSUE B 2010
Licensee=Weston Williamson/5989497001, User=sam.albert
Not for Resale, 03/27/2016 21:27:56 MDT

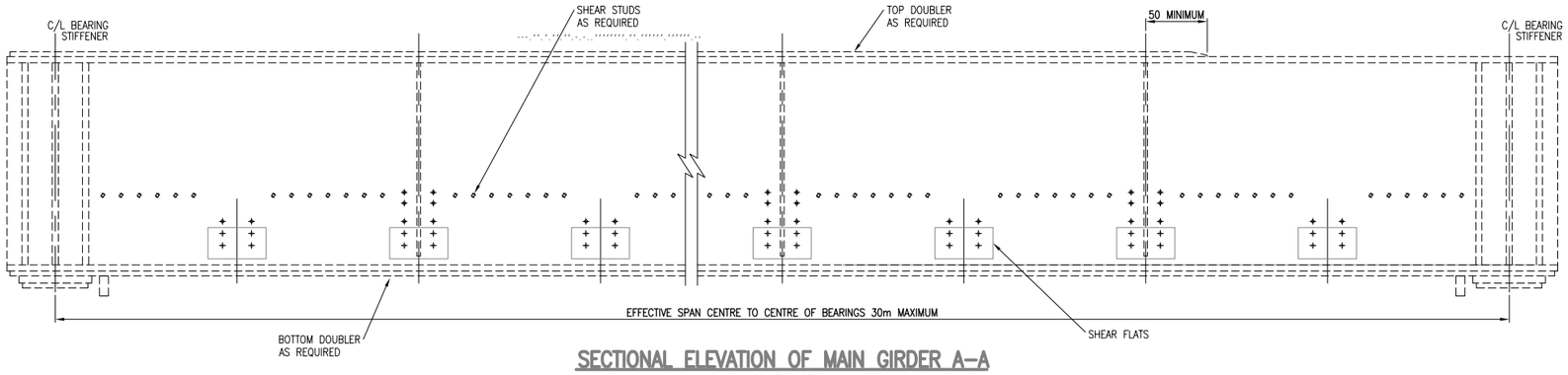

SECTIONAL ELEVATION OF MAIN GIRDER A–A

SCALE 1:25

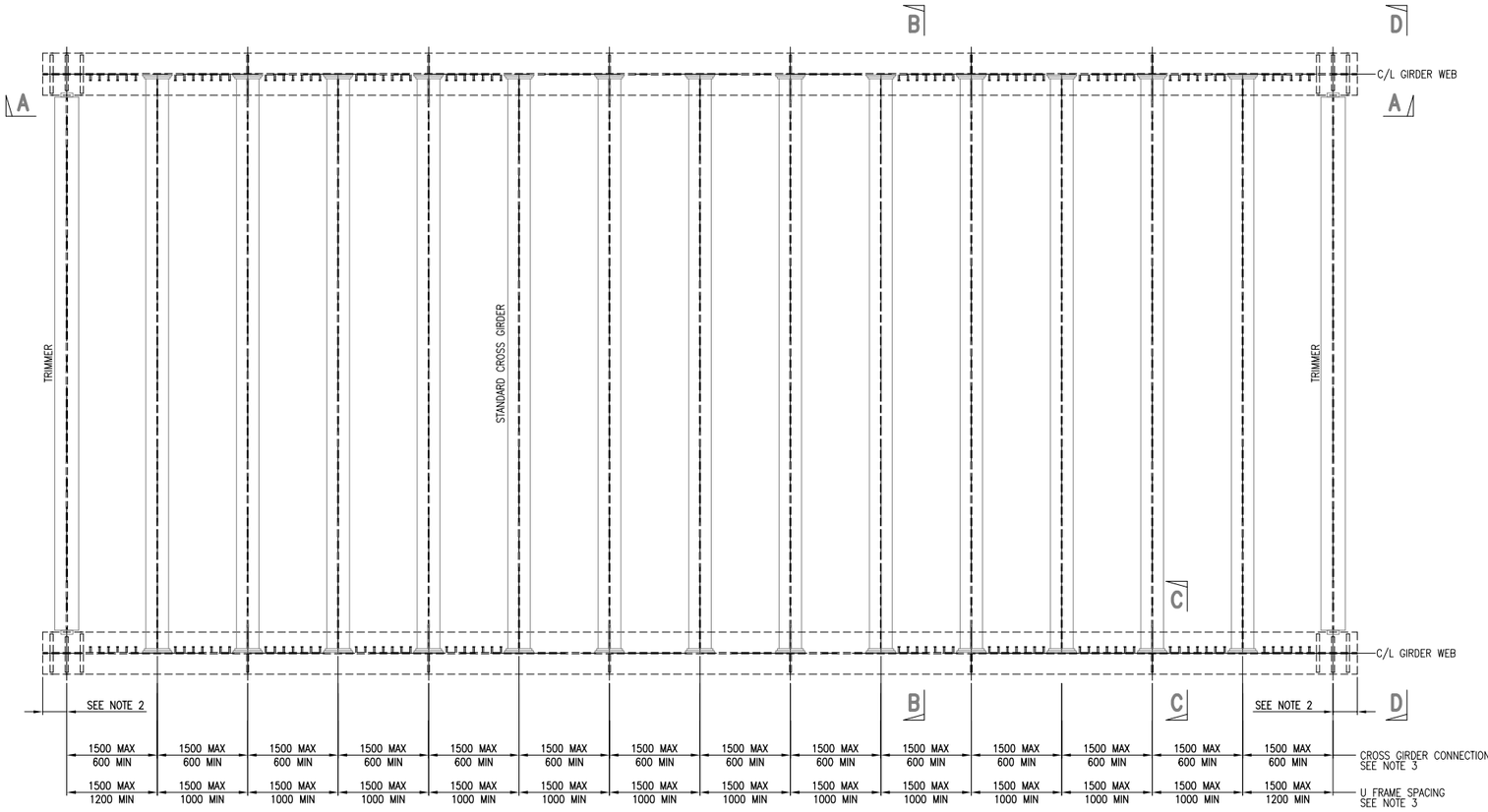

PLAN ON STEELWORK

SCALE 1:50

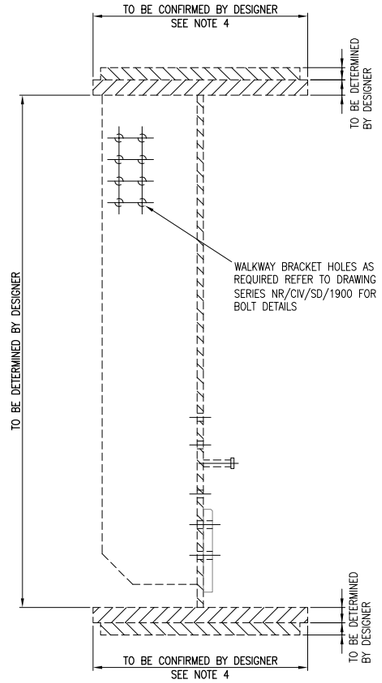

SECTION C–C

SCALE 1:10

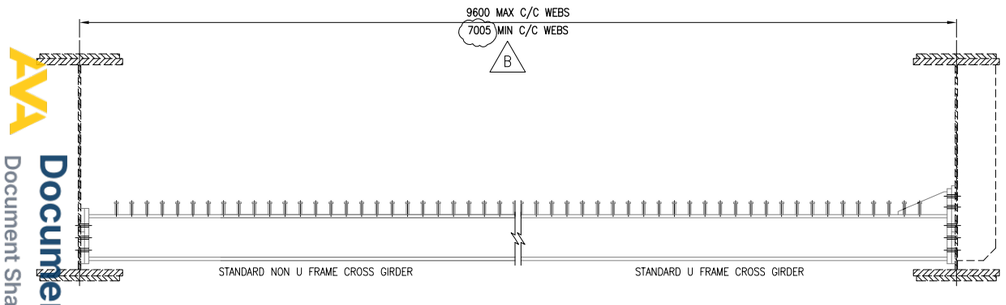

SECTION B–B

SCALE 1:25

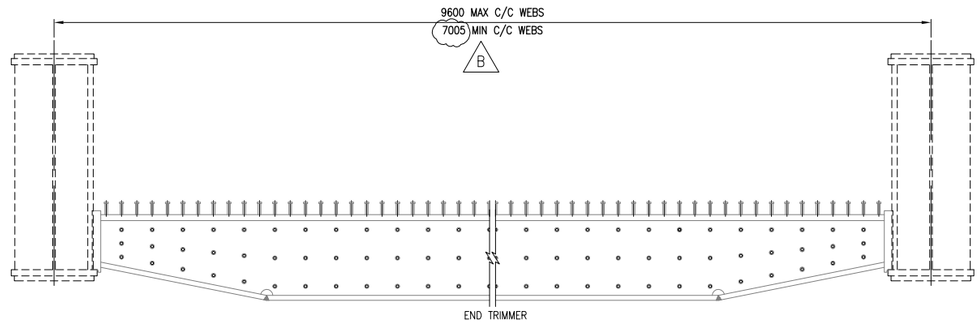

ELEVATION D–D

SCALE 1:25

DRAWING No. NR/CIV/SD/1514

NOTES

1. REFER TO DRAWING NO. NR/CIV/SD/1510 FOR NOTES.
2. MAIN GIRDER OVERHANG FROM CENTRE OF BEARING (AND CONCRETE) TO BE LIMITED TO ENSURE VERTICAL MOVEMENT OF THE DECK IS WITHIN THE LIMITS SPECIFIED IN THE DESIGN CODES LISTED ON NR/CIV/SD/1504.
3. FOR CROSS GIRDER AND U–FRAME SPACING PHILOSOPHY REFER TO TECHNICAL USER MANUAL.
4. REFER TO DRAWING NR/CIV/SD/1504 FOR ASSUMED MAIN GIRDER DIMENSIONS.

Rev	Date	Description of revision	Design'd	C'kd
B	MAY 10	EUROCODE ISSUE	LZ	IP
A	19.09.09	FIRST ISSUE	LZ	IP
P1	09.04.09	INDEPENDENT CHECK	LZ	IP

Network Rail

Network Rail Infrastructure Ltd
Registered Office:
Kings Place
90 York Way
London
N1 9AG

	Name	Position	Signature	Date
Approved	Paul Clark	Snr. Proj. Eng. Manager Infrastructure Investment Building and Civils	P.C.	MAY 10

Master copy with original signatures held by Network Rail HQ CIVIL ENGINEERING STANDARD DESIGN

© COPYRIGHT NETWORK RAIL 2009

'E' TYPE UNDERBRIDGE STANDARD DRAWINGS

STEELWORK GENERAL ASSEMBLY DETAILS DOUBLE TRACK SQUARE COMPOSITE FLOOR

Scale	AS SHOWN
Drawing Number	NR/CIV/SD/1514 B

AVA Documents
Document Sharing Hub