Supplementary Information

The following information is associated with Network Rail Standard:
NR CIV/SD/1532 Rev B

Additional Content Access

Click the link below to access CAD version of this drawing.

CAD Drawing

- CIV/SD/1532

If you have any questions, or need assistance, please contact **IHS Support**

Information accessed via the links above is the property of the Copyright holder

IHS Additional Content Page

Documents
Document Sharing Hub

Copyright Network Rail
Provided by IHS under license with Network Rail
No reproduction or networking permitted without license from IHS
Full document details: NR NR-CIV-SD-1532 ISSUE B 2010

Licensee=Weston Williamson/5989497001, User=sam, albett
Not for Resale, 03/27/2016 21:35:59 MDT

Copyright Network Rail
Provided by IHS under license with Network Rail
No reproduction or networking permitted without license from IHS
Full document details: NR NR-CIV-SD-1532 ISSUE B 2010
Licensee=Weston Williamson5588497001, User=sam_albett
Not for Resale, 03/27/2016 21:35:59 MDT
Documents
Document Sharing Hub

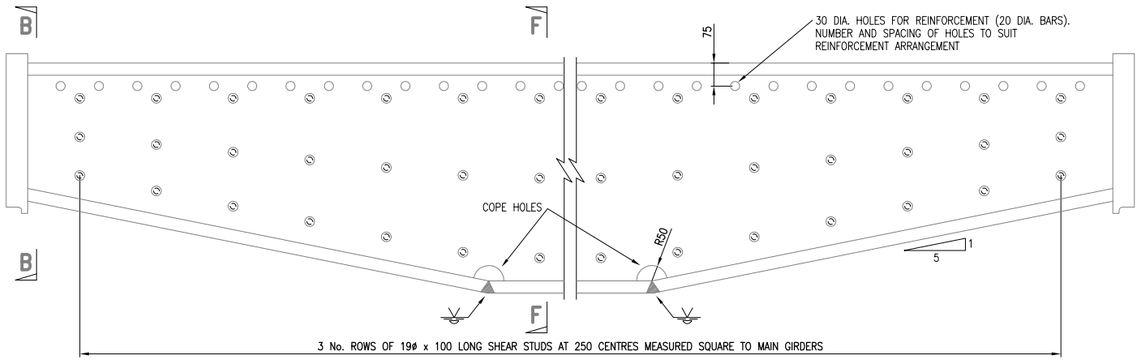

ELEVATION A–A ON TRIMMER

SCALE 1:10

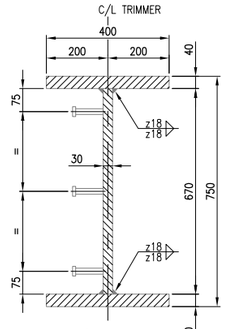

SECTION F–F

SCALE 1:10

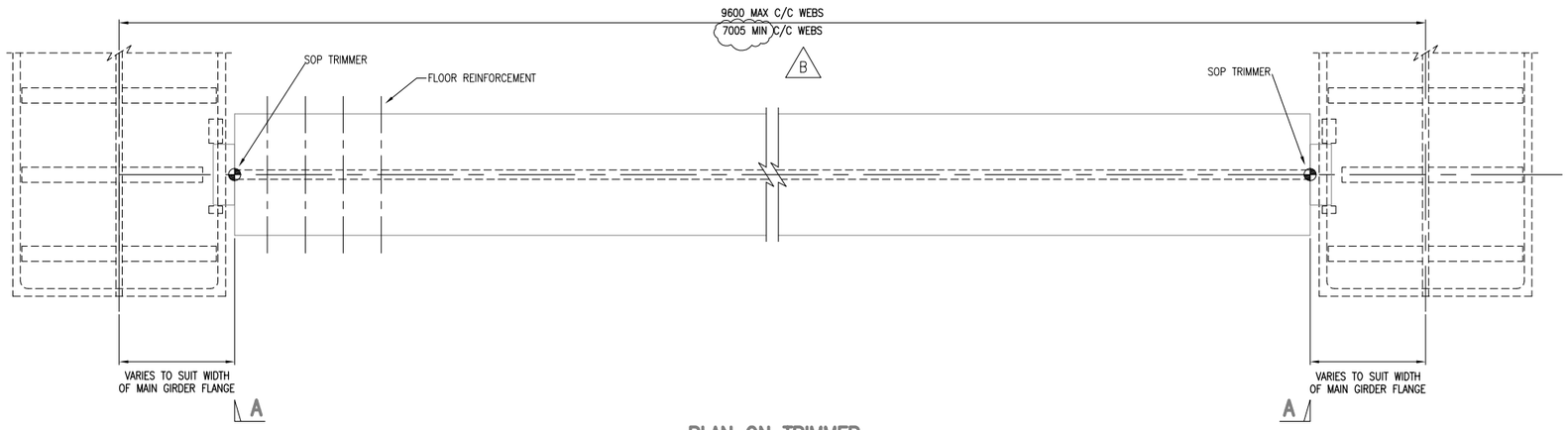

PLAN ON TRIMMER

SCALE 1:10

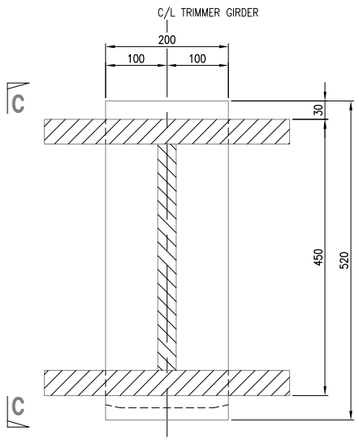

SECTION B–B

SCALE 1:5

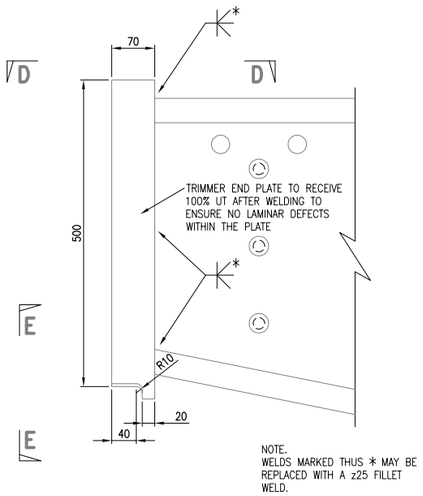

NOTE.
WELDS MARKED THUS * MAY BE REPLACED WITH A z25 FILLET WELD.

ELEVATION C–C

SCALE 1:5

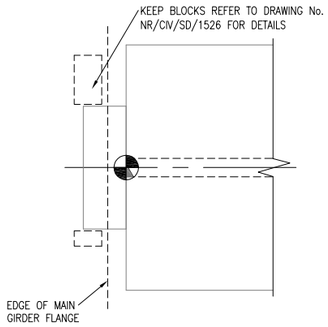

PLAN ON D–D

SCALE 1:5

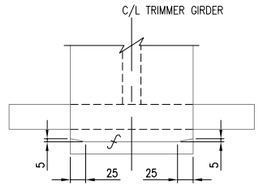

ELEVATION E–E

SCALE 1:5

DRAWING No. NR/CIV/SD/1532

NOTES

1. REFER TO DRAWING NO. NR/CIV/SD/1530 FOR NOTES.

Rev	Date	Description of revision	Design'd	C'kd
B	MAY 10	EUROCODE ISSUE	LZ	IP
A	18.09.09	FIRST ISSUE	LZ	IP
P1	09.04.09	INDEPENDENT CHECK	LZ	IP

Network Rail

Network Rail Infrastructure Ltd
Registered Office:
Kings Place
90 York Way
London
N1 9AG

Approved	Paul Clark	Snr. Proj. Eng. Manager Infrastructure Investment Building and Civils	P.C.	MAY 10
	Name	Position	Signature	Date

Master copy with original signatures held by Network Rail HQ CIVIL ENGINEERING STANDARD DESIGN

© COPYRIGHT NETWORK RAIL 2009

'E' TYPE UNDERBRIDGE STANDARD DRAWINGS

DOUBLE TRACK SQUARE FILLER BEAM FLOOR TRIMMER DETAILS

Scale	AS SHOWN	
Drawing Number	NR/CIV/SD/1532	B