Supplementary Information

The following information is associated with Network Rail Standard:
NR CIV/SD/1536 Rev C

Additional Content Access

Click the link below to access CAD version of this drawing.

CAD Drawing

- CIV/SD/1536

If you have any questions, or need assistance, please contact **IHS Support**

Information accessed via the links above is the property of the Copyright holder

IHS Additional Content Page

Documents
Document Sharing Hub

Copyright Network Rail
Provided by IHS under license with Network Rail
No reproduction or networking permitted without license from IHS
Full document details: NR NR-CIV-SD-1536 ISSUE C 2013

Licensee=Weston Williamson/5989497001, User=sam, albett
Not for Resale, 03/27/2016 19:29:59 MDT

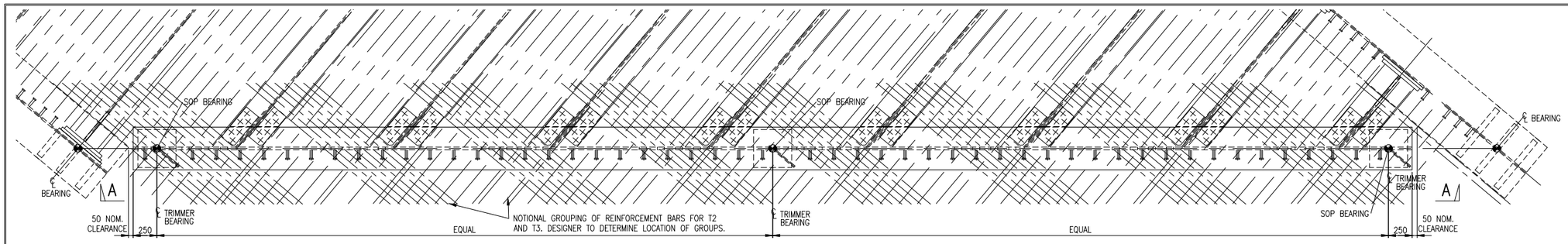

PLAN ON TRIMMER ⚠

SCALE 1:25

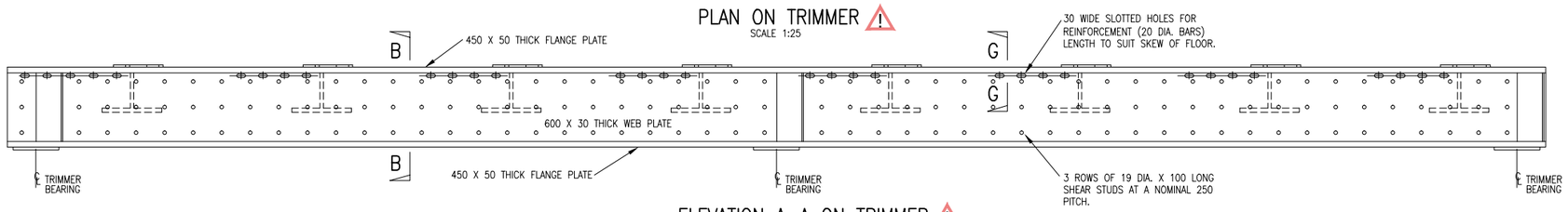

ELEVATION A–A ON TRIMMER ⚠

SCALE 1:25

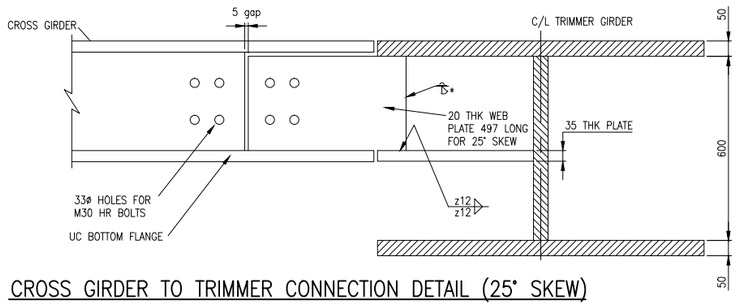

CROSS GIRDER TO TRIMMER CONNECTION DETAIL (25° SKEW)

BOLTS AND SPLICES REMOVED FOR CLARITY
SCALE 1:10

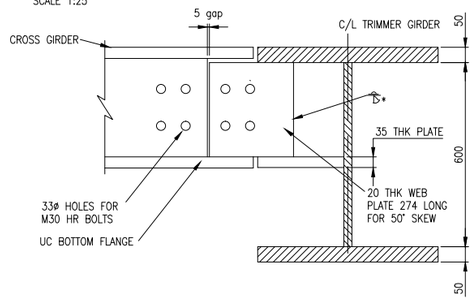

CROSS GIRDER TO TRIMMER CONNECTION DETAIL (50° SKEW)

BOLTS AND SPLICES REMOVED FOR CLARITY
SCALE 1:10

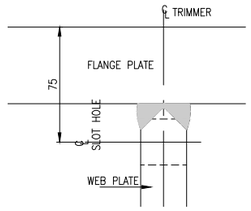

SECTION G–G

SCALE 1:2

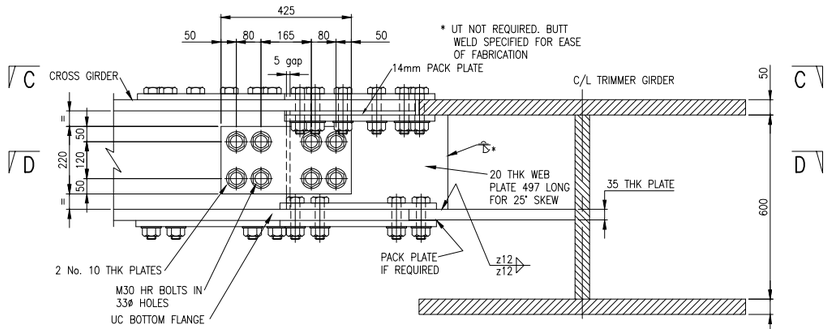

CROSS GIRDER TO TRIMMER CONNECTION DETAIL (25° SKEW)

SCALE 1:10

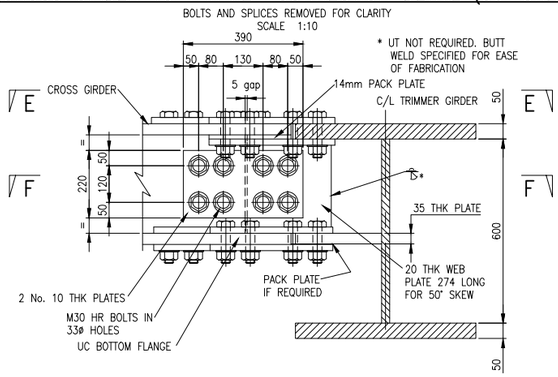

CROSS GIRDER TO TRIMMER CONNECTION DETAIL (50° SKEW)

SCALE 1:10

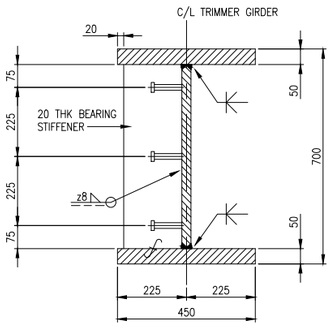

SECTION B–B

SCALE 1:10

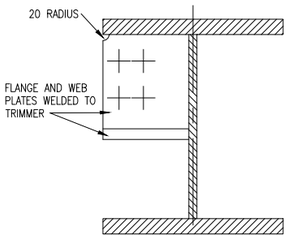

SECTION H–H TYPICAL FOR SPLICE PLATES

SCALE 1:10

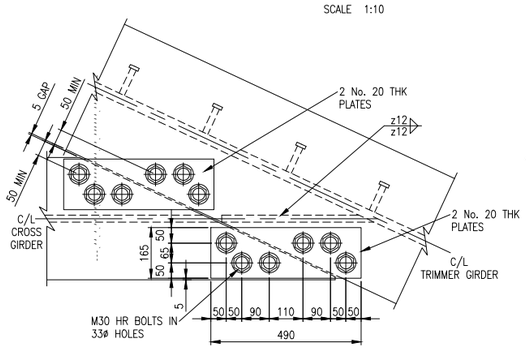

PLAN ON C–C

SCALE 1:10

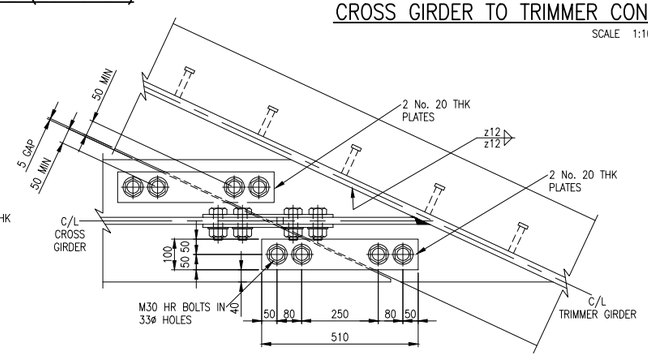

SECTION D–D

SCALE 1:10

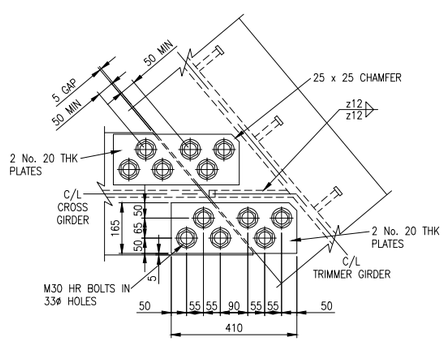

PLAN ON E–E

SCALE 1:10

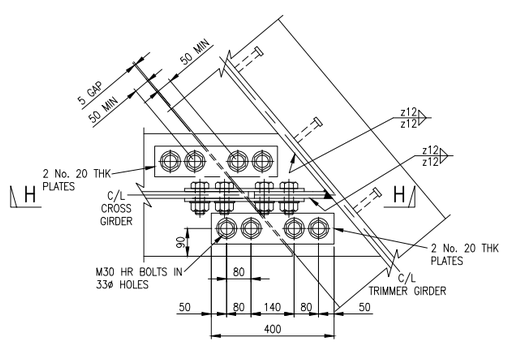

SECTION F–F

SCALE 1:10

DRAWING No. NR/CIV/SD/1536

NOTES

1. REFER TO DRAWING NO. NR/CIV/SD/1530 FOR NOTES.
2. TRIMMER DESIGNED TO ACCOMMODATE BEARINGS UP TO 350x300mm (UPPER PLATE). REFER TO DRAWING NO. NR/CIV/SD/1550 FOR TRIMMER BEARING LOADS.

⚠ ELEMENT POTENTIALLY UNSTABLE DURING TRANSPORTATION OR IN TEMPORARY CONDITION.

Rev	Date	Description of revision	Design'd	C'kd
C	JUN 13	HAZARD TRIANGLES ADDED	MV	RES
B	MAY 10	EUROCODE ISSUE	LZ	IP
A	07.08.09	FIRST ISSUE	LZ	IP
P1	09.04.09	INDEPENDENT CHECK	LZ	IP

NetworkRail
KINGS PLACE
90, York Way
London. N1 9AG
Tel: 0203-3569-596

Approved				
	Name	Position	Signature	Date

Master copy with original signatures held by Network Rail HQ CIVIL ENGINEERING STANDARD DESIGN

© COPYRIGHT NETWORK RAIL 2011

'E' TYPE UNDERBRIDGE STANDARD DRAWINGS

DOUBLE TRACK
25° TO 50°
FILLER BEAM FLOOR
TRIMMER DETAILS

Scale: AS SHOWN

Drawing Number: NR/CIV/SD/1536 C

Documents
Document Sharing Hub
Copyright Network Rail
Provided by IHS under license with Network Rail
No reproduction or networking permitted without license from IHS
Full document details: NR NR-CIV-SD-1536 ISSUE C 2013
Licensee=Weston Williamson/5989497001, User=sam, albett
Not for Resale, 03/27/2016 19:29:59 MDT