Supplementary Information

The following information is associated with Network Rail Standard:
NR CIV/SD/1539 Rev C

Additional Content Access

Click the link below to access CAD version of this drawing.

CAD Drawing

- CIV/SD/1539

If you have any questions, or need assistance, please contact **IHS Support**

Information accessed via the links above is the property of the Copyright holder

IHS Additional Content Page

Documents
Document Sharing Hub

Copyright Network Rail
Provided by IHS under license with Network Rail
No reproduction or networking permitted without license from IHS
Full document details: NR NR-CIV-SD-1539 ISSUE C 2013

Licensee=Weston Williamson/5989497001, User=sam, albett
Not for Resale, 03/27/2016 19:30:06 MDT

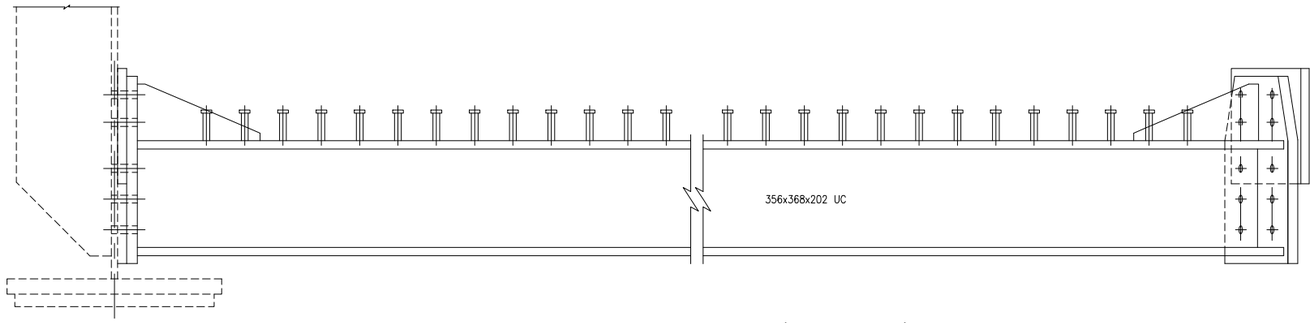

ELEVATION ON CROSS GIRDER (AT U FRAME)

(DRAWN AT 0° SKEW)
SCALE 1:10

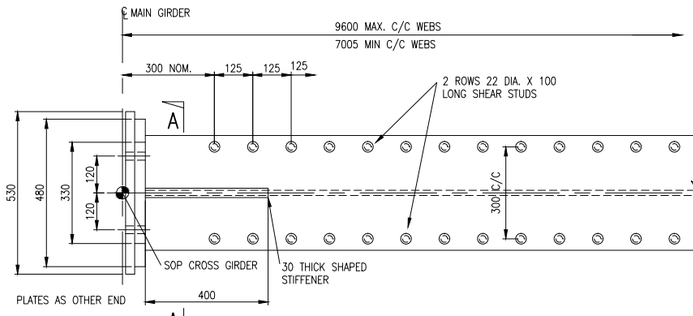

PART PLAN ON CROSS GIRDER (AT U FRAME) PERPENDICULAR TO MAIN GIRDERS

SCALE 1:10

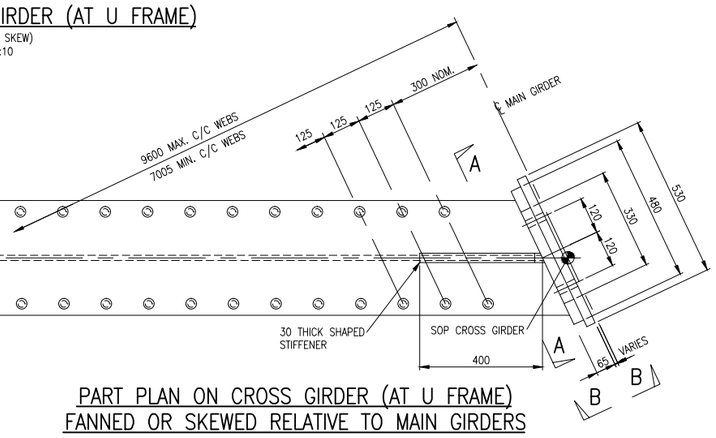

PART PLAN ON CROSS GIRDER (AT U FRAME) FANNED OR SKEWED RELATIVE TO MAIN GIRDERS

SCALE 1:10

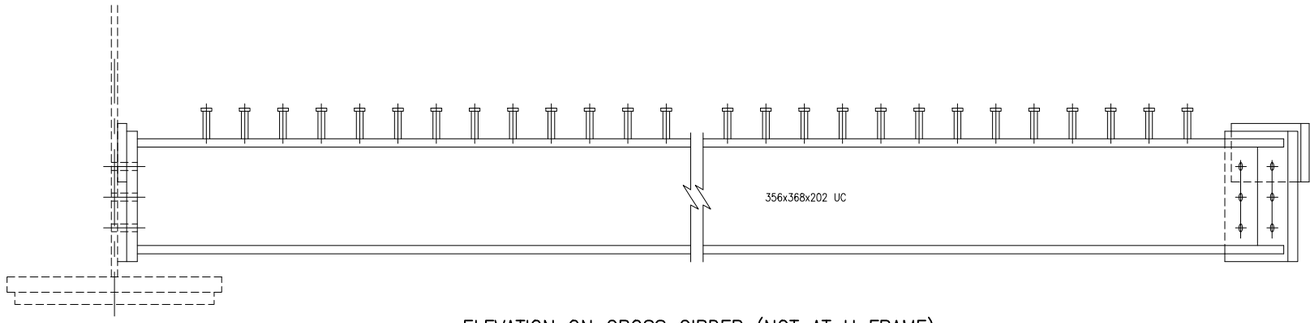

ELEVATION ON CROSS GIRDER (NOT AT U FRAME)

SCALE 1:10

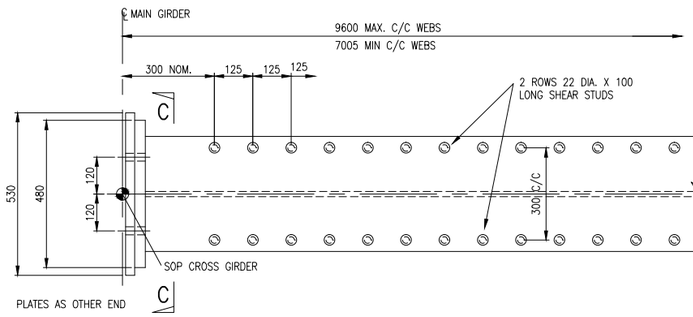

PART PLAN ON CROSS GIRDER (NOT AT U FRAME) PERPENDICULAR TO MAIN GIRDERS

SCALE 1:10

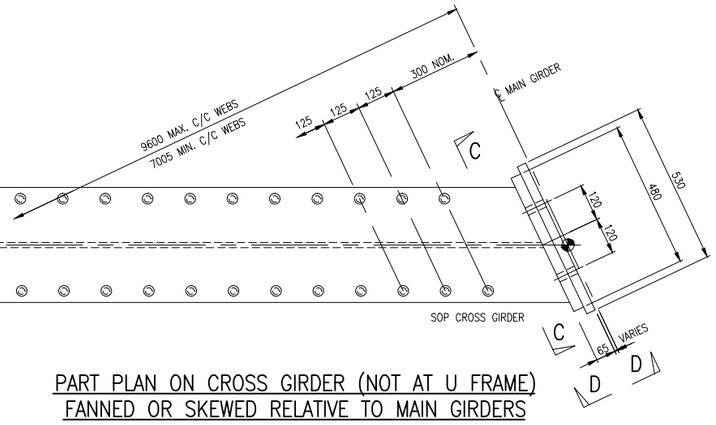

PART PLAN ON CROSS GIRDER (NOT AT U FRAME) FANNED OR SKEWED RELATIVE TO MAIN GIRDERS

SCALE 1:10

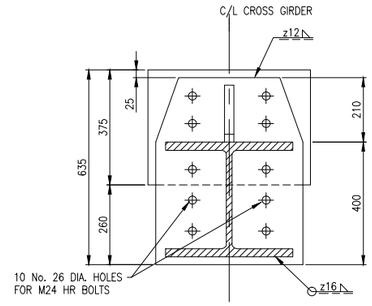

SECTION A–A

SCALE 1:10

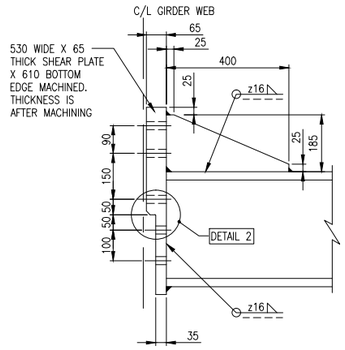

ELEVATION B–B

SCALE 1:10

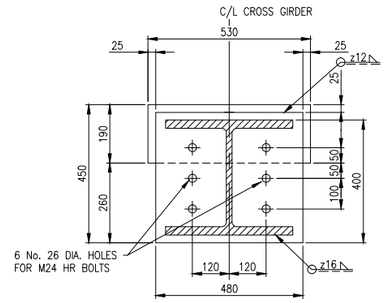

SECTION C–C

SCALE 1:10

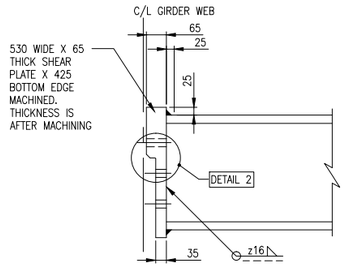

ELEVATION D–D

SCALE 1:10

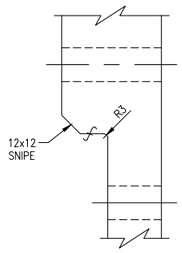

DETAIL 2

SCALE 1:2

DRAWING No. NR/CIV/SD/1539

NOTES

1. REFER TO DRAWING NO. NR/CIV/SD/1530 FOR NOTES
2. SHEAR PLATE TO BE IN POSITIVE CONTACT WITH THE CROSS GIRDER AND POSITIVE CONTACT BETWEEN WEB AND CROSS GIRDER.

Rev	Date	Description of revision	Design'd	C'kd
C	JUN 13	DETAIL 1 REMOVED	MV	RES
B	MAY 10	EUROCODE ISSUE	LZ	IP
A	18.09.09	FIRST ISSUE	LZ	IP
P1	09.04.09	INDEPENDENT CHECK	LZ	IP

NetworkRail
KINGS PLACE
90, York Way
London. N1 9AG
Tel: 0203–3569–596

Approved				
	Name	Position	Signature	Date

Master copy with original signatures held by Network Rail HQ
CIVIL ENGINEERING STANDARD DESIGN

© COPYRIGHT NETWORK RAIL 2011

'E' TYPE UNDERBRIDGE
STANDARD DRAWINGS

DOUBLE TRACK
0° TO 25°
COMPOSITE FLOOR
CROSS GIRDER DETAILS

Scale	AS SHOWN	
Drawing Number	NR/CIV/SD/1539	C

Documents
Document Sharing Hub
Copyright Network Rail
Provided by IHS under license with Network Rail
No reproduction or networking permitted without license from IHS
Licensee=Weston Williamson/5989497001, User=sam, albett
Not for Resale, 03/27/2016 19:30:06 MDT
Full document details: NR NR-CIV-SD-1539 ISSUE C 2013