Supplementary Information

The following information is associated with Network Rail Standard:
NR CIV/SD/1540 Rev C

Additional Content Access

Click the link below to access CAD version of this drawing.

CAD Drawing

- CIV/SD/1540

If you have any questions, or need assistance, please contact **IHS Support**

Information accessed via the links above is the property of the Copyright holder

IHS Additional Content Page

--`,,,,,,`,,,,,,`,,`,,,,,,,,``-`-`,,`,,`,`,,`---

Documents
Document Sharing Hub

Copyright Network Rail
Provided by IHS under license with Network Rail
No reproduction or networking permitted without license from IHS
Full document details: NR NR-CIV-SD-1540 ISSUE C 2013

Licensee=Weston Williamson/5989497001, User=sam, albett
Not for Resale, 03/27/2016 19:29:22 MDT

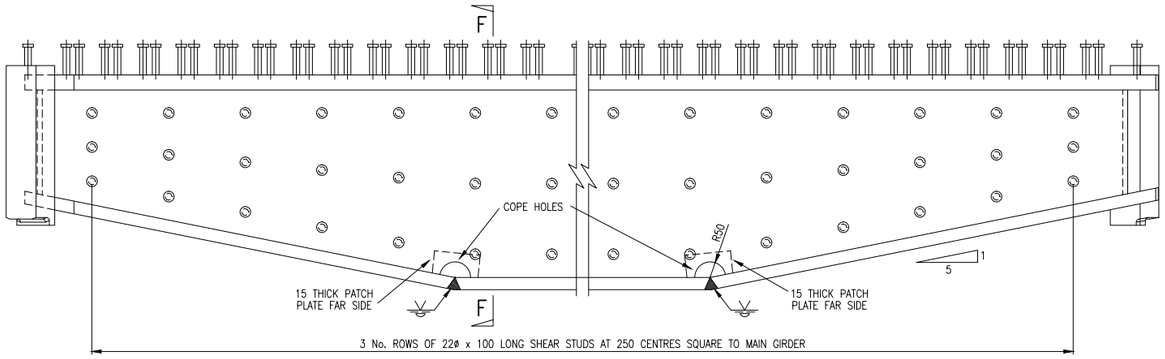

ELEVATION A–A ON TRIMMER

SCALE 1:10

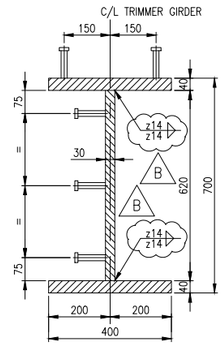

SECTION F–F

SCALE 1:10

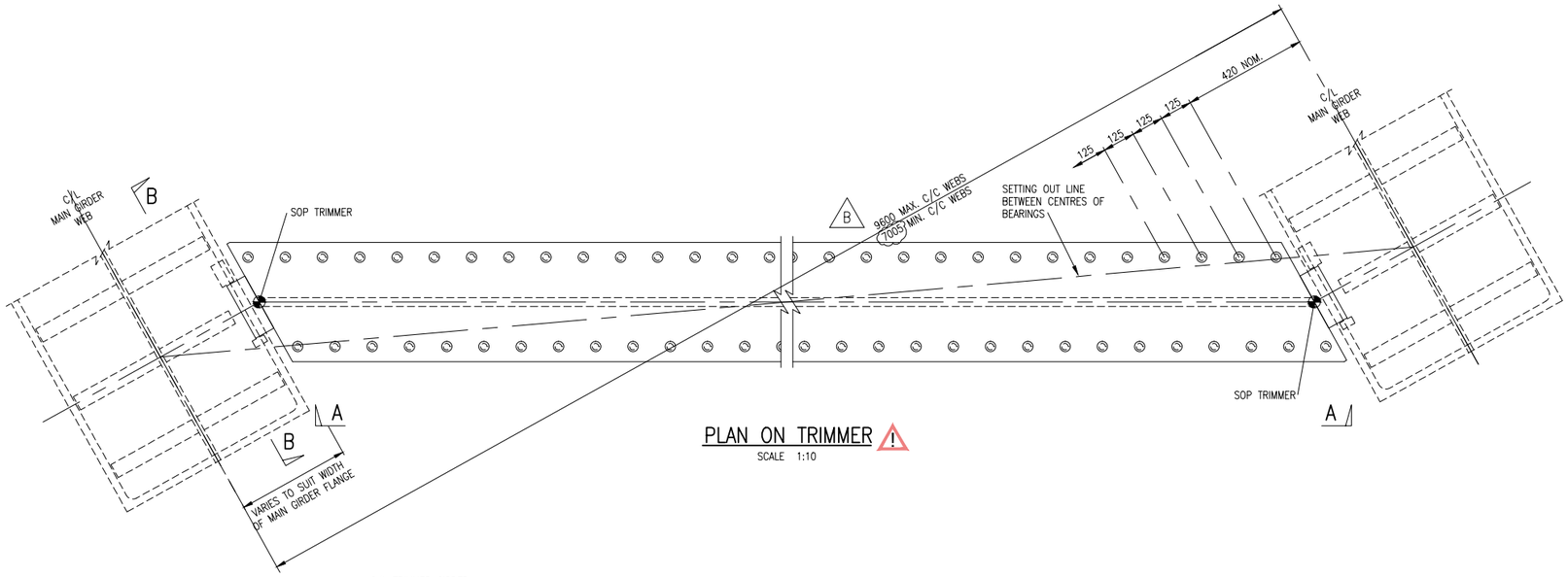

PLAN ON TRIMMER ⚠

SCALE 1:10

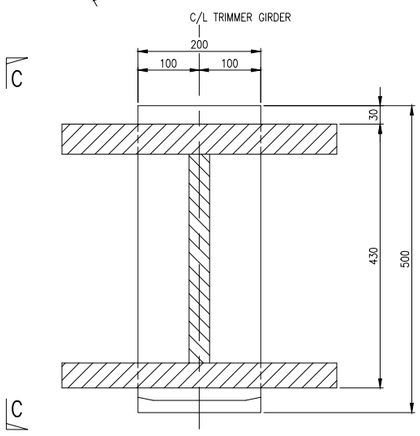

SECTION B–B

SCALE 1:5

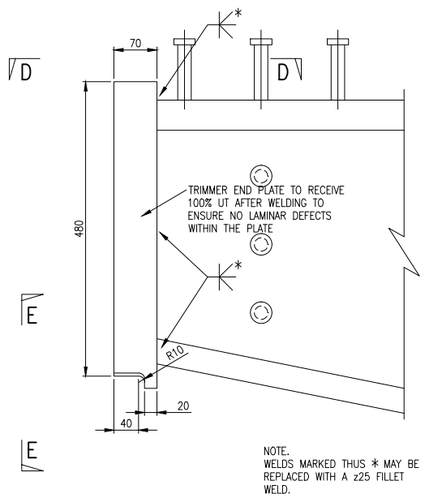

NOTE.
WELDS MARKED THUS * MAY BE REPLACED WITH A z25 FILLET WELD.

ELEVATION C–C

SCALE 1:5

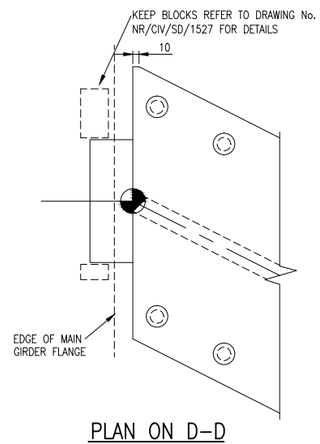

PLAN ON D–D

SCALE 1:5

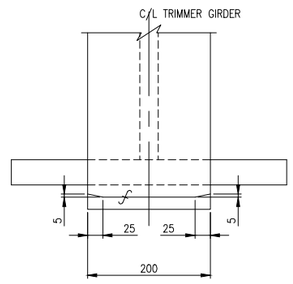

ELEVATION E–E

SCALE 1:5

DRAWING No. NR/CIV/SD/1540

NOTES

1. REFER TO DRAWING NO. NR/CIV/SD/1530 FOR NOTES

⚠ ELEMENT POTENTIALLY UNSTABLE DURING TRANSPORTATION OR IN TEMPORARY CONDITION.

Rev	Date	Description of revision	Design'd	C'kd
C	JUN 13	HAZARD TRIANGLES ADDED	MV	RES
B	MAY 10	EUROCODE ISSUE	LZ	IP
A	18.09.09	FIRST ISSUE	LZ	IP
P1	09.04.09	INDEPENDENT CHECK	LZ	IP

NetworkRail
KINGS PLACE
90, York Way
London. N1 9AG
Tel: 0203–3569–596

Approved				
	Name	Position	Signature	Date

Master copy with original signatures held by Network Rail HQ
CIVIL ENGINEERING STANDARD DESIGN
© COPYRIGHT NETWORK RAIL 2011

'E' TYPE UNDERBRIDGE STANDARD DRAWINGS

DOUBLE TRACK
0° TO 25°
COMPOSITE FLOOR
TRIMMER DETAILS

Scale: AS SHOWN

Drawing Number: NR/CIV/SD/1540 C

Documents
Document Sharing Hub
Copyright Network Rail
Provided by IHS under license with Network Rail
No reproduction or networking permitted without license from IHS
Full document details: NR NR-CIV-SD-1540 ISSUE C 2013
Licensee=Weston Williamson/5989497001, User=sam, albett
Not for Resale, 03/27/2016 19:29:22 MDT