The following information is associated with Network Rail Standard:
NR CIV/SD/1545 Rev C

Additional Content Access

Click the link below to access CAD version of this drawing.

CAD Drawing

- CIV/SD/1545

If you have any questions, or need assistance, please contact **IHS Support**

Information accessed via the links above is the property of the Copyright holder

IHS Additional Content Page

--`,,,,,,`,,,,,,`,,`,,,,,,,,``-`-`,,`,,`,`,,`---

Documents
Document Sharing Hub

Copyright Network Rail
Provided by IHS under license with Network Rail
No reproduction or networking permitted without license from IHS
Full document details: NR NR-CIV-SD-1545 ISSUE C 2013

Licensee=Weston Williamson/5989497001, User=sam, albett
Not for Resale, 03/27/2016 19:29:30 MDT

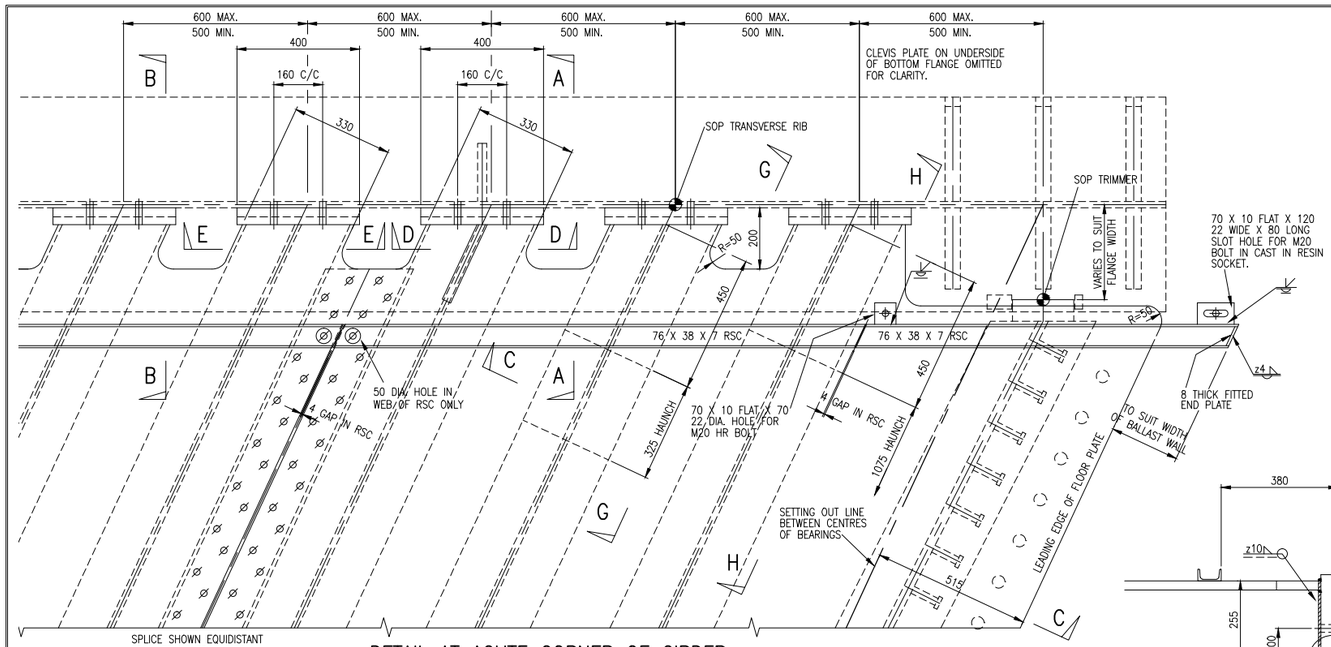

DETAIL AT ACUTE CORNER OF GIRDER

SCALE 1:10

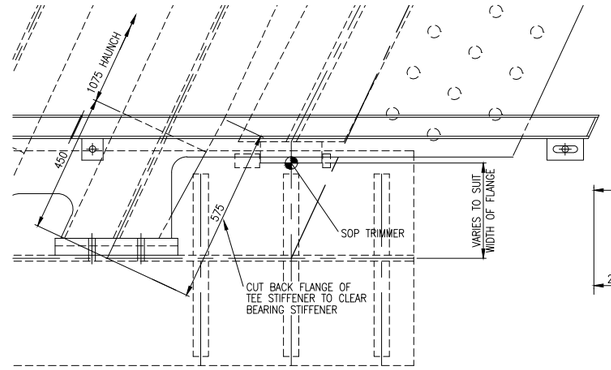

VARIATION AT OBTUSE CORNER OF GIRDER

SCALE 1:10

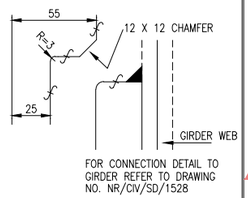

EXPLODED DETAIL 1

SCALE 1:2

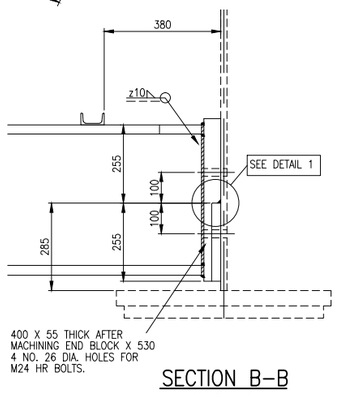

SECTION B–B

SCALE 1:10

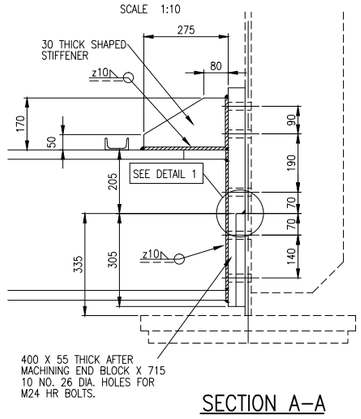

SECTION A–A

SCALE 1:10

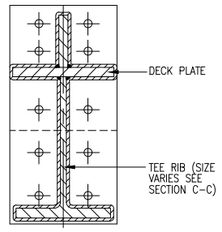

SECTION D–D (AT U FRAME)

SCALE 1:10

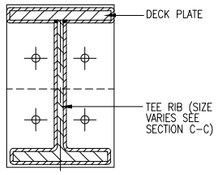

SECTION E–E (NOT AT U FRAME)

SCALE 1:10

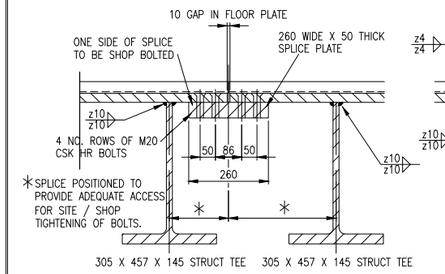

NOTE.
ARRANGEMENT OF CROSS GIRDERS APPLIES AT BOTH ENDS OF BRIDGE

SPLICE DETAIL

SPLICE SHOWN AT MAX. OFFSET AT ⅓ – ⅔ DISTANCE BETWEEN TRANSVERSE RIBS
SCALE 1:10

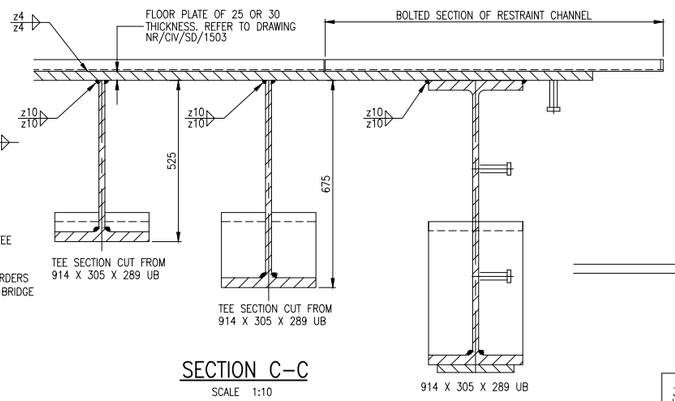

SECTION C–C

SCALE 1:10

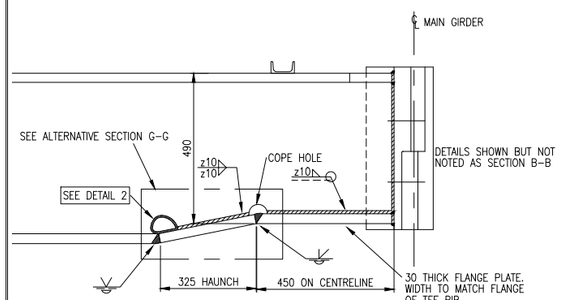

SECTION G–G

SCALE 1:10

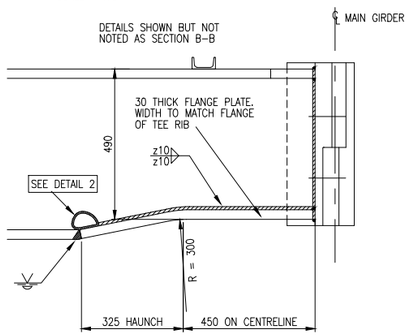

ALTERNATIVE SECTION G–G

SCALE 1:10

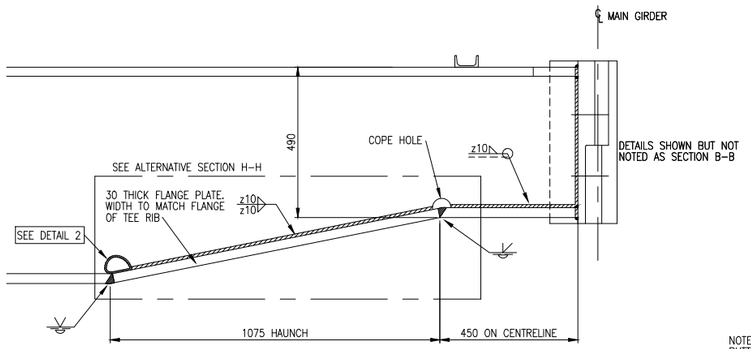

SECTION H–H

SCALE 1:10

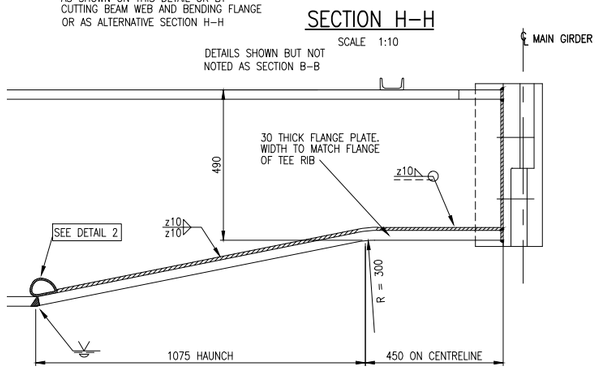

ALTERNATIVE SECTION H–H

SCALE 1:10

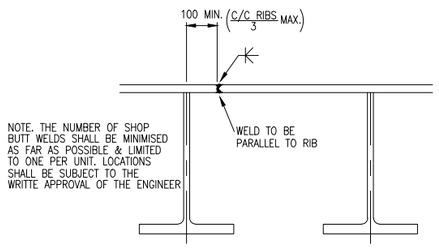

NOTE. THE NUMBER OF SHOP BUTT WELDS SHALL BE MINIMISED AS FAR AS POSSIBLE & LIMITED TO ONE PER UNIT. LOCATIONS SHALL BE SUBJECT TO THE WRITTE APPROVAL OF THE ENGINEER

LOCATION OF FLOOR PLATE SHOP BUTT WELD (IF REQUIRED)

SCALE 1:10

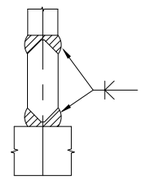

SECTION F–F

SCALE 1:2

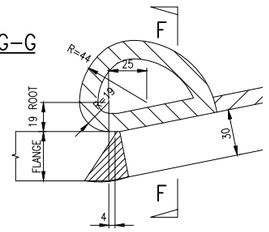

DETAIL 2

SCALE 1:2

DRAWING No. NR/CIV/SD/1545

NOTES

1. REFER TO DRAWING NO. NR/CIV/SD/1530 FOR NOTES.
2. SHEAR PLATE TO BE IN POSITIVE CONTACT WITH THE TRANSVERSE RIB AND POSITIVE CONTACT BETWEEN WEB AND TRANSVERSE RIB.
3. SEE TABLE BELOW FOR SELECTION OF HEAVY FLOOR AND LIGHT FLOOR.

TRAFFIC \ ANNUAL TONNAGE x10⁶	42–27	27–18	18–12	12–7
25t axles	HEAVY			
EC Mix				LIGHT
Type 9 MUs				

FLOOR PLATE 25mm THICK FOR LIGHT
FLOOR PLATE 30mm THICK FOR HEAVY

⚠ ELEMENT POTENTIALLY UNSTABLE DURING TRANSPORTATION OR IN TEMPORARY CONDITION.

Rev	Date	Description of revision	Design'd	C'kd
C	JUN 13	HAZARD TRIANGLES ADDED	MV	RES
B	MAY 10	EUROCODE ISSUE	DG	IP
A	18.09.09	FIRST ISSUE	DG	IP
P1	09.04.09	INDEPENDENT CHECK	DG	IP

NetworkRail
KINGS PLACE
90, York Way
London. N1 9AG
Tel: 0203–3569–596

Approved				
	Name	Position	Signature	Date

Master copy with original signatures held by Network Rail HQ CIVIL ENGINEERING STANDARD DESIGN

© COPYRIGHT NETWORK RAIL 2011

'E' TYPE UNDERBRIDGE STANDARD DRAWINGS

DOUBLE TRACK
0° TO 25° STEEL FLOOR
TRANSVERSE RIB DETAILS

Scale: AS SHOWN

Drawing Number: NR/CIV/SD/1545 C

Documents
Document Sharing Hub
Copyright Network Rail
Provided by IHS under license with Network Rail
No reproduction or networking permitted without license from IHS
Full document details: NR NR-CIV-SD-1545 ISSUE C 2013
Licensee=Weston Williamson/5989497001, User=sam, albett
Not for Resale, 03/27/2016 19:29:30 MDT