Supplementary Information

The following information is associated with Network Rail Standard:
NR CIV/SD/1547 Rev C

Additional Content Access

Click the link below to access CAD version of this drawing.

CAD Drawing

- CIV/SD/1547

If you have any questions, or need assistance, please contact **IHS Support**

Information accessed via the links above is the property of the Copyright holder

IHS Additional Content Page

Documents
Document Sharing Hub

Copyright Network Rail
Provided by IHS under license with Network Rail
No reproduction or networking permitted without license from IHS
Full document details: NR NR-CIV-SD-1547 ISSUE C 2013

Licensee=Weston Williamson/5989497001, User=sam, albett
Not for Resale, 03/27/2016 19:29:37 MDT

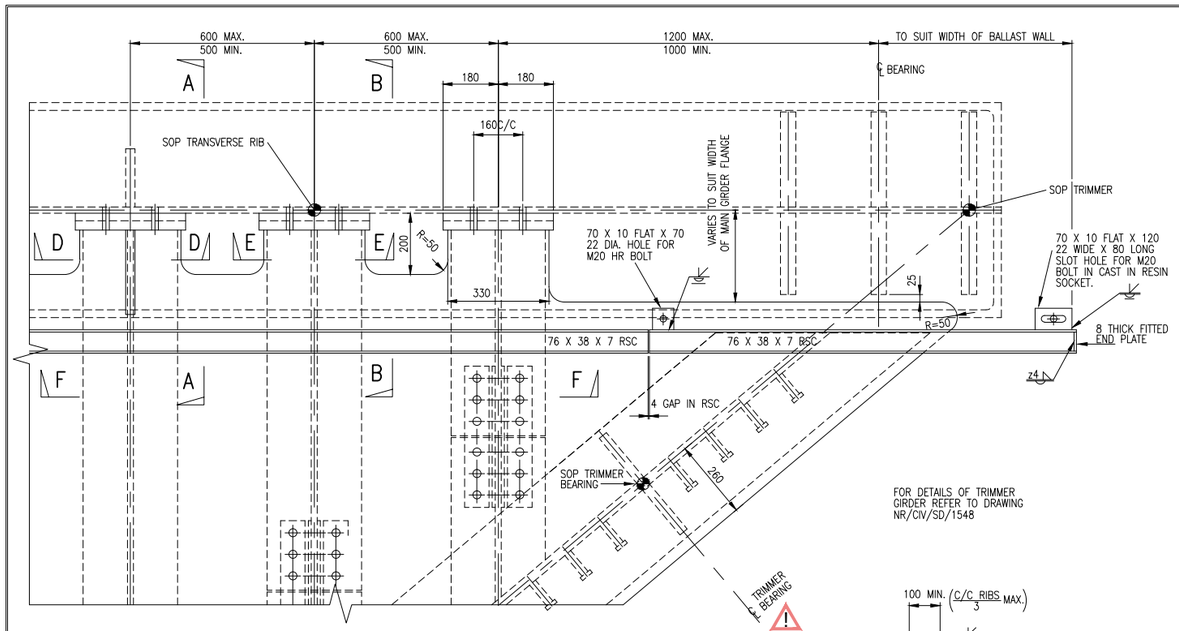

FOR DETAILS OF TRIMMER GIRDER REFER TO DRAWING NR/CIV/SD/1548

DETAIL AT ACUTE END OF GIRDER

SCALE 1:10

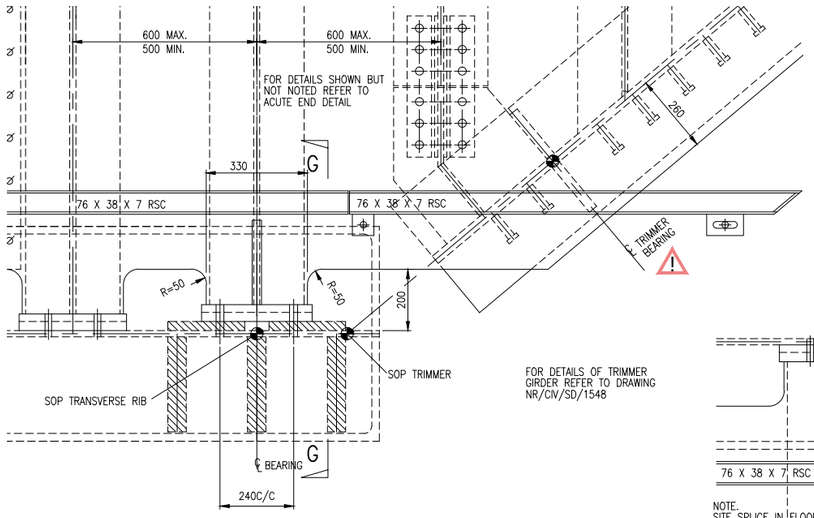

FOR DETAILS OF TRIMMER GIRDER REFER TO DRAWING NR/CIV/SD/1548

DETAIL AT OBTUSE END OF GIRDER

SCALE 1:10

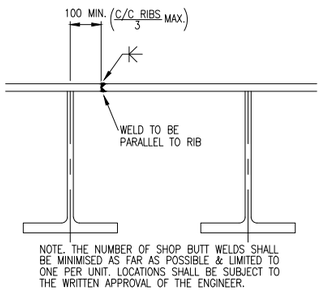

LOCATION OF FLOOR PLATE SHOP BUTT WELD (IF REQUIRED)

SCALE 1:10

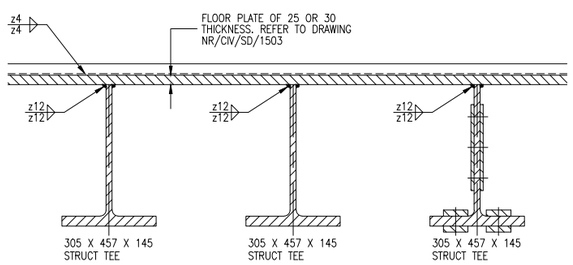

SECTION F–F

SCALE 1:10

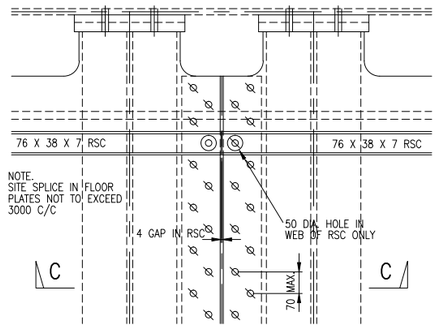

DETAIL AT SITE SPLICE IN FLOOR PLATE

SPLICE SHOWN EQUIDISTANT FROM
TRANSVERSE RIB
SCALE 1:10

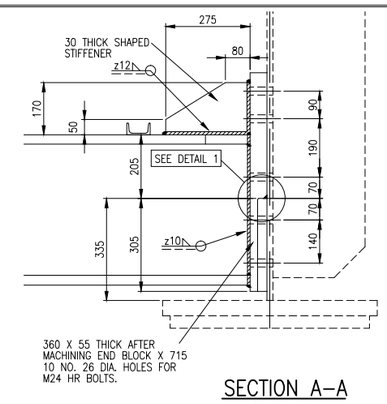

SECTION A–A

SCALE 1:10

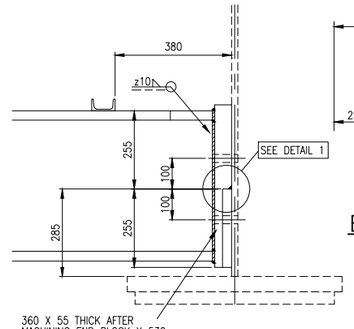

SECTION B–B

SCALE 1:10

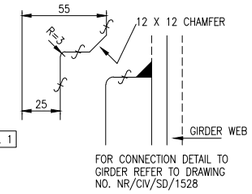

EXPLODED DETAIL 1

SCALE 1:2

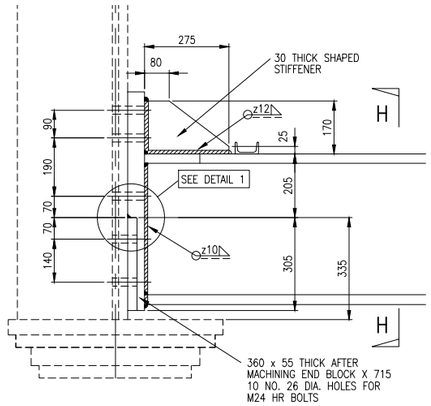

SECTION G–G

SCALE 1:10

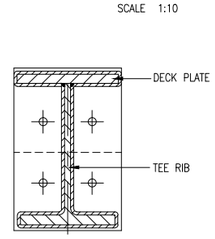

SECTION E–E (NOT AT U FRAME)

SCALE 1:10

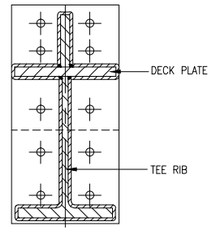

SECTION D–D (AT U FRAME)

SCALE 1:10

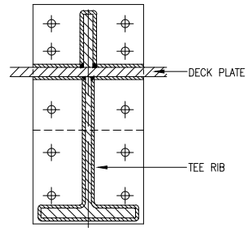

SECTION H–H

SCALE 1:10

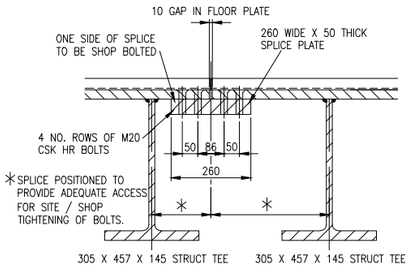

SECTION C–C

SPLICE SHOWN AT MAX. OFFSET
AT ⅓ – ⅔ DISTANCE BETWEEN
TRANSVERSE RIBS
SCALE 1:10

DRAWING No. NR/CIV/SD/1547

NOTES

1. REFER TO DRAWING NO. NR/CIV/SD/1530 FOR NOTES.
2. SHEAR PLATE TO BE IN POSITIVE CONTACT WITH THE TRANSVERSE RIB AND POSITIVE CONTACT BETWEEN WEB AND TRANSVERSE RIB.
3. SEE TABLE BELOW FOR SELECTION OF HEAVY FLOOR AND LIGHT FLOOR.

ANNUAL TONNAGE x10⁶ / TRAFFIC	42–27	27–18	18–12	12–7
25t axles	HEAVY			
EC Mix				LIGHT
Type 9 MUs				

FLOOR PLATE 25mm THICK FOR LIGHT
FLOOR PLATE 30mm THICK FOR HEAVY

⚠ ELEMENT POTENTIALLY UNSTABLE DURING TRANSPORTATION OR IN TEMPORARY CONDITION.

Rev	Date	Description of revision	Design'd	C'kd
C	JUN 13	HAZARD TRIANGLES ADDED	MV	RES
B	MAY 10	EUROCODE ISSUE	DG	IP
A	18.09.09	FIRST ISSUE	DG	IP
P1	09.04.09	INDEPENDENT CHECK	DG	IP

NetworkRail
KINGS PLACE
90, York Way
London. N1 9AG
Tel: 0203–3569–596

Approved				
	Name	Position	Signature	Date

Master copy with original signatures held by Network Rail HQ CIVIL ENGINEERING STANDARD DESIGN

© COPYRIGHT NETWORK RAIL 2011

'E' TYPE UNDERBRIDGE STANDARD DRAWINGS

DOUBLE TRACK
25° TO 50° STEEL FLOOR
TRANSVERSE RIB DETAILS

Scale: AS SHOWN

Drawing Number: NR/CIV/SD/1547 C

Documents
Document Sharing Hub
Copyright Network Rail
Provided by IHS under license with Network Rail
No reproduction or networking permitted without license from IHS
Licensee=Weston Williamson/5989497001, User=sam, albett
Not for Resale, 03/27/2016 19:29:37 MDT
Full document details: NR NR-CIV-SD-1547 ISSUE C 2013