The following information is associated with Network Rail Standard:
NR CIV/SD/1548 Rev C

Additional Content Access

Click the link below to access CAD version of this drawing.

CAD Drawing

- CIV/SD/1548

If you have any questions, or need assistance, please contact **IHS Support**

Information accessed via the links above is the property of the Copyright holder

IHS Additional Content Page

Documents
Document Sharing Hub

Copyright Network Rail
Provided by IHS under license with Network Rail
No reproduction or networking permitted without license from IHS
Full document details: NR NR-CIV-SD-1548 ISSUE C 2013

Licensee=Weston Williamson/5989497001, User=sam, albett
Not for Resale, 03/27/2016 19:30:14 MDT

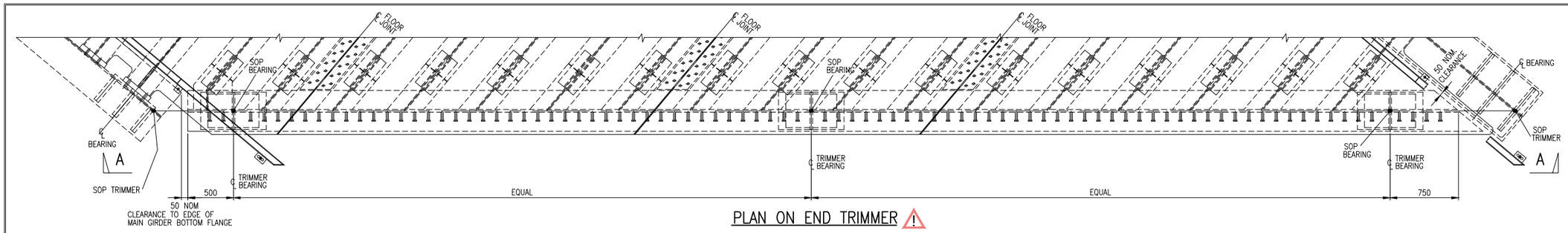

PLAN ON END TRIMMER

SCALE 1:25

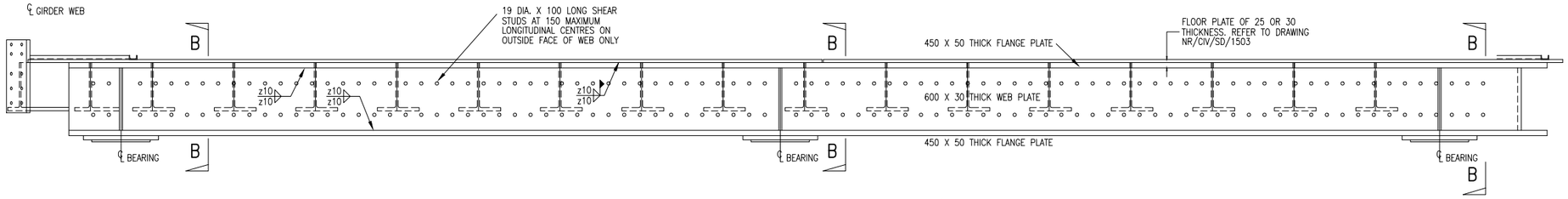

ELEVATION A–A

SCALE 1:25

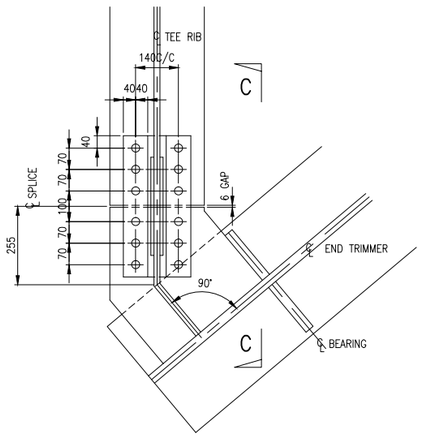

TEE RIB TO END TRIMMER AT OBTUSE END OF FLOOR (50° SHOWN)

SCALE 1:10

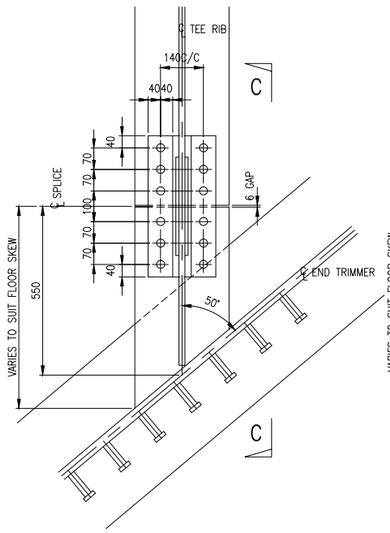

TEE RIB TO END TRIMMER 43° TO 50° SKEW (50° SHOWN)

SCALE 1:10

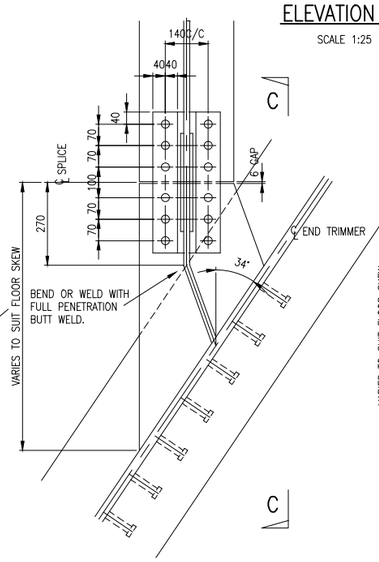

TEE RIB TO END TRIMMER 34° TO 42° SKEW (34° SHOWN)

SCALE 1:10

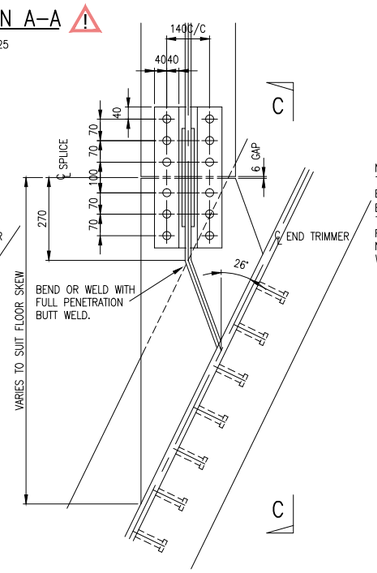

TEE RIB TO END TRIMMER 26° TO 33° SKEW (26° SHOWN)

SCALE 1:10

NOTE.
MAKE UP LENGTH OF TEE RIB FABRICATED FROM SAME SIZE SECTION AS RIB OR PLATES OF SIMILAR PROPERTIES TO TEE SECTION WELDED TOGETHER

NOTE.
THE WELD PREPARATION TO END OF RIB IS SHOWN FOR EASE OF ACCESS/FABRICATION. THE MINIMUM SIZE OF WELD REQUIRED IS A z10 FILLET. NOT TO BE TESTED AS A BUTT WELD.

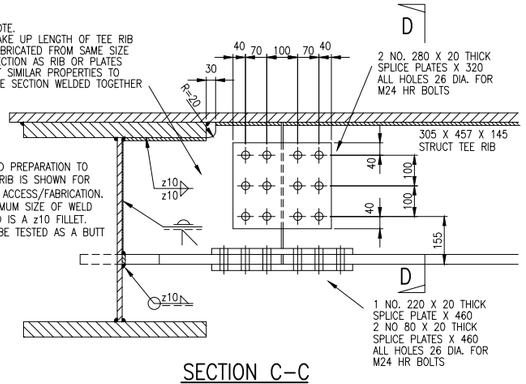

SECTION C–C

SCALE 1:10

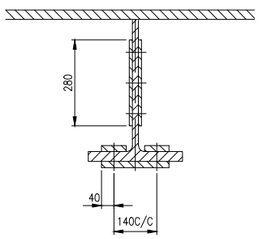

SECTION D–D

SCALE 1:10

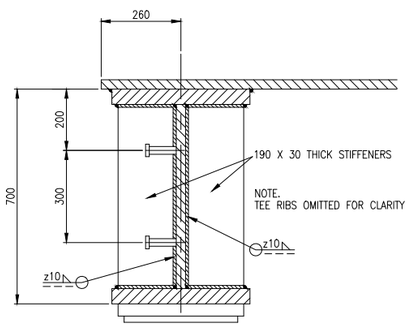

SECTION B–B

SCALE 1:10

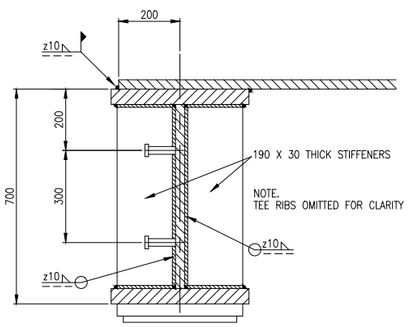

ALTERNATIVE SECTION B–B

SCALE 1:10

DRAWING No. NR/CIV/SD/1548

NOTES
1. REFER TO DRAWING NO. NR/CIV/SD/1530 FOR NOTES

⚠ ELEMENT POTENTIALLY UNSTABLE DURING TRANSPORTATION OR IN TEMPORARY CONDITION.

Rev	Date	Description of revision	Design'd	C'kd
C	JUN 13	HAZARD TRIANGLES ADDED	MV	RES
B	MAY 10	EUROCODE ISSUE	DG	IP
A	18.09.09	FIRST ISSUE	DG	IP
P1	09.04.09	INDEPENDENT CHECK	DG	IP

NetworkRail
KINGS PLACE
90, York Way
London. N1 9AG
Tel: 0203–3569–596

Approved				
	Name	Position	Signature	Date

Master copy with original signatures held by Network Rail HQ CIVIL ENGINEERING STANDARD DESIGN

© COPYRIGHT NETWORK RAIL 2011

'E' TYPE UNDERBRIDGE STANDARD DRAWINGS

DOUBLE TRACK
25° TO 50° STEEL FLOOR
TRIMMER GIRDER DETAILS

Scale: AS SHOWN

Drawing Number: NR/CIV/SD/1548 C

Documents
Document Sharing Hub
Copyright Network Rail
Provided by IHS under license with Network Rail
No reproduction or networking permitted without license from IHS
Full document details: NR NR-CIV-SD-1548 ISSUE C 2013
Licensee=Weston Williamson/5989497001, User=sam, albett
Not for Resale, 03/27/2016 19:30:14 MDT