Supplementary Information

The following information is associated with Network Rail Standard:
NR CIV/SD/1561 Rev B

Additional Content Access

Click the link below to access CAD version of this drawing.

CAD Drawing

- CIV/SD/1561

If you have any questions, or need assistance, please contact **IHS Support**

Information accessed via the links above is the property of the Copyright holder

IHS Additional Content Page

Documents
Document Sharing Hub

Copyright Network Rail
Provided by IHS under license with Network Rail
No reproduction or networking permitted without license from IHS
Full document details: NR NR-CIV-SD-1561 ISSUE B 2010

Licensee=Weston Williamson/5989497001, User=sam, albett
Not for Resale, 03/27/2016 21:24:12 MDT

Copyright Network Rail
Provided by IHS under license with Network Rail
No reproduction or networking permitted without license from IHS
Full document details: NR NR-CIV-SD-1561 ISSUE B 2010
Licensee=Weston Williamson7598349701, User=sam.albert
Not for Resale, 03/27/2016 21:24:12 MDT

DRAWING No. NR/CIV/SD/1561

NOTES

1. REFER TO DRAWING NO. NR/CIV/SD/1560 FOR NOTES.

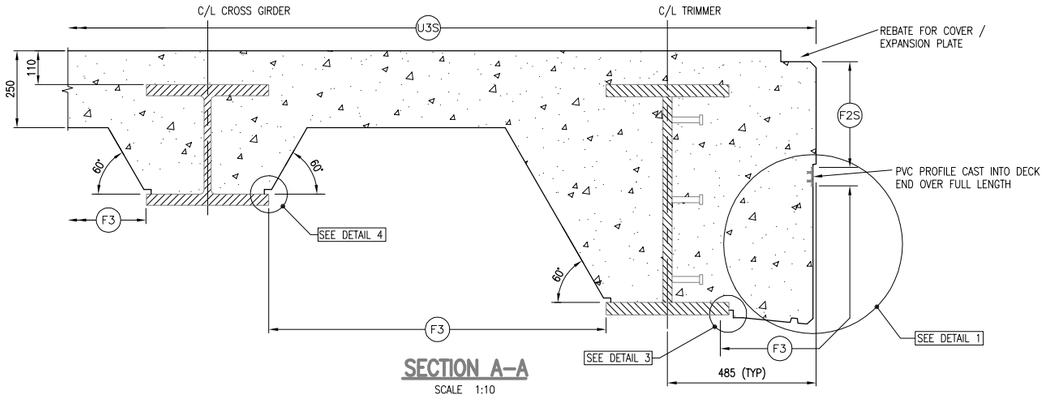

SECTION A–A
SCALE 1:10

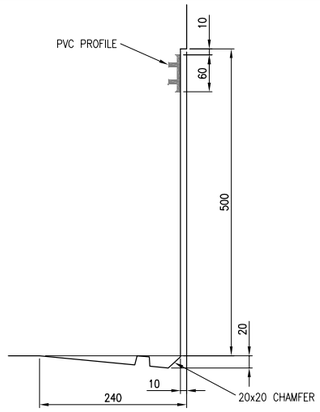

DETAIL 1
SCALE 1:5

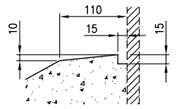

DETAIL 2
SCALE 1:5

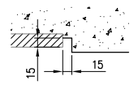

DETAIL 3
SCALE 1:5

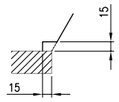

DETAIL 4
SCALE 1:5

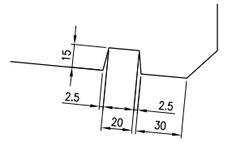

DRIP DETAIL
SCALE 1:2

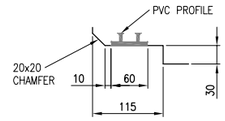

DETAIL 5
SCALE 1:5

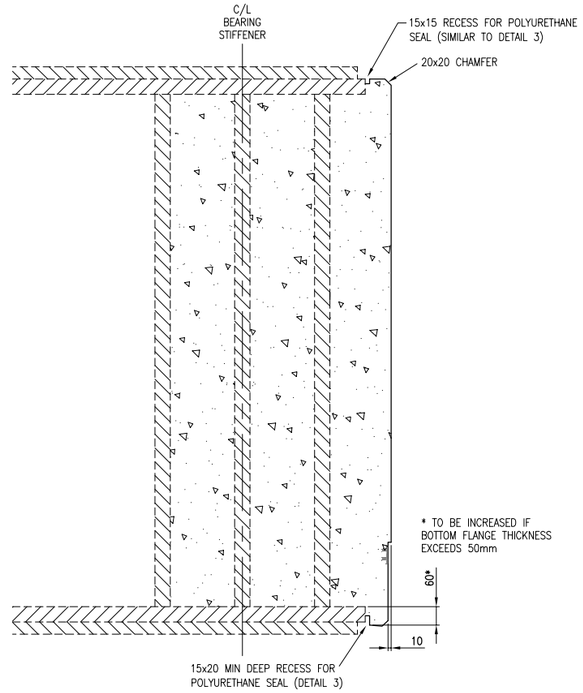

SECTIONAL ELEVATION ON E–E
SCALE 1:10

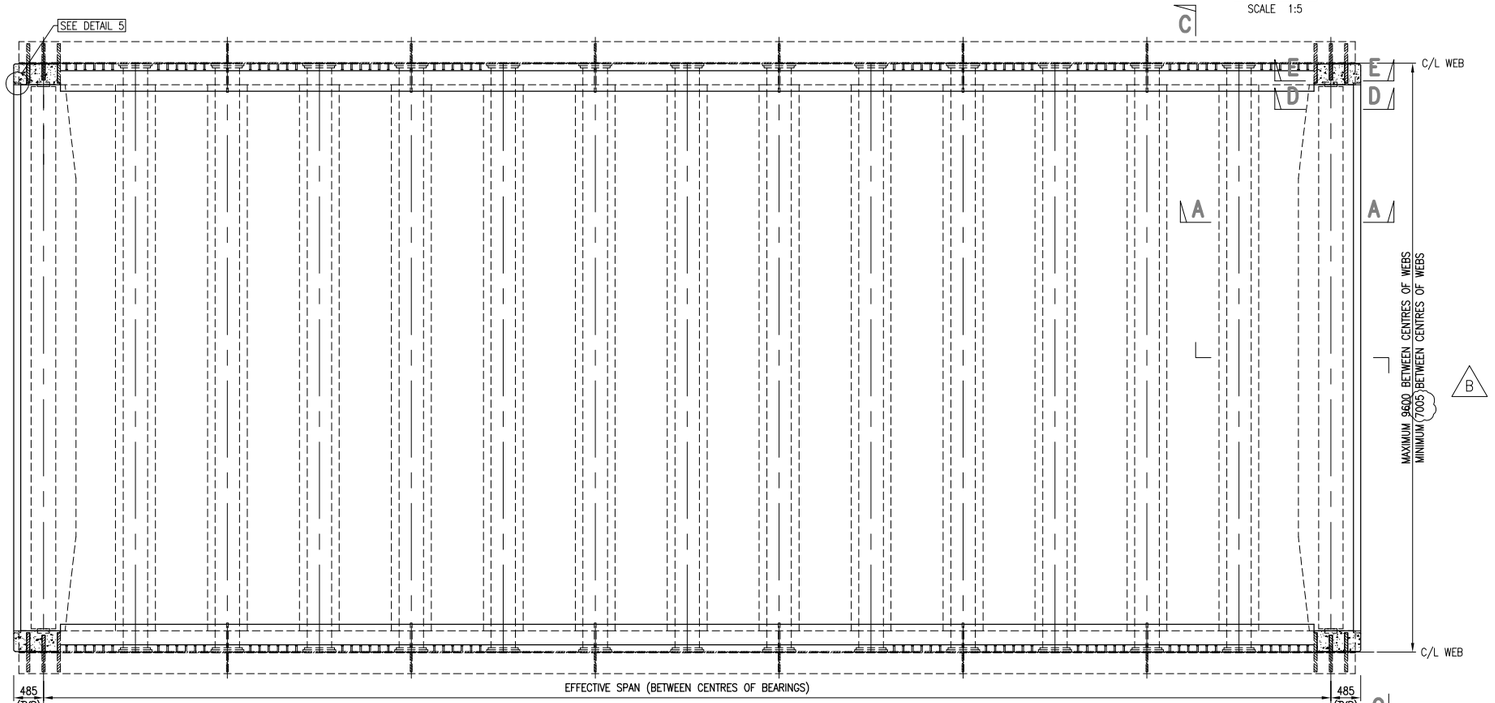

SECTIONAL PLAN ON B–B
SCALE 1:50

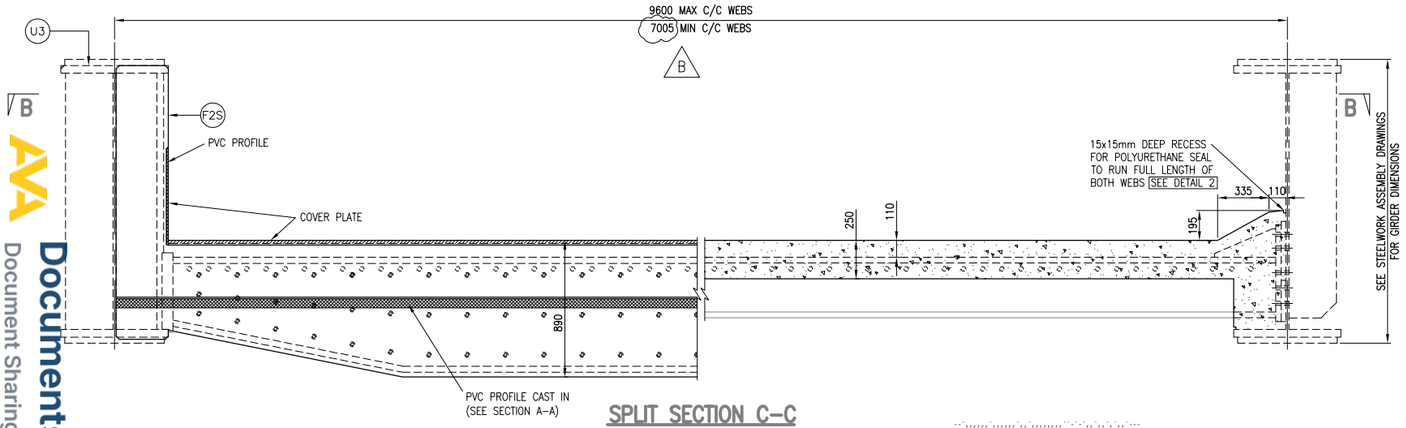

SPLIT SECTION C–C
SCALE 1:20

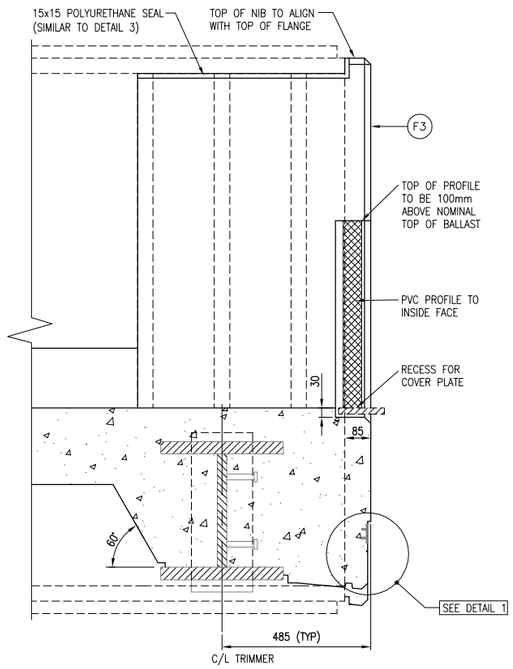

SECTIONAL ELEVATION ON D–D
SCALE 1:10

Rev	Date	Description of revision	Design'd	C'kd
B	MAY 10	EUROCODE ISSUE	LZ	IP
A	18.09.09	FIRST ISSUE	LZ	IP
P1	28.04.09	INDEPENDENT CHECK	LZ	IP

Network Rail

Network Rail Infrastructure Ltd
Registered Office:
Kings Place
90 York Way
London
N1 9AG

Approved	Name	Position	Signature	Date
	Paul Clark	Snr. Proj. Eng. Manager Infrastructure Investment Building and Civils	P.C.	MAY 10

Master copy with original signatures held by Network Rail HQ
CIVIL ENGINEERING STANDARD DESIGN

© COPYRIGHT NETWORK RAIL 2009

'E' TYPE UNDERBRIDGE STANDARD DRAWINGS

CONCRETE DETAILS
DOUBLE TRACK SQUARE
FILLER BEAM FLOOR

Scale	AS SHOWN	
Drawing Number	NR/CIV/SD/1561	B

AVA Documents
Document Sharing Hub