Supplementary Information

The following information is associated with Network Rail Standard:
NR CIV/SD/1564 Rev C

Additional Content Access

Click the link below to access CAD version of this drawing.

CAD Drawing

- CIV/SD/1564

If you have any questions, or need assistance, please contact **IHS Support**

Information accessed via the links above is the property of the Copyright holder

IHS Additional Content Page

Documents
Document Sharing Hub

Copyright Network Rail
Provided by IHS under license with Network Rail
No reproduction or networking permitted without license from IHS
Full document details: NR NR-CIV-SD-1564 ISSUE C 2013

Licensee=Weston Williamson/5989497001, User=sam, albett
Not for Resale, 03/27/2016 19:28:35 MDT

DRAWING No.	
NOTES	
1.	REFER TO DRAWING NO. NR/CIV/SD/1560 FOR NOTES.
2.	NOTE TO SCHEME DESIGNER: POSITION OF HOLES IN CROSS GIRDERS AND TRIMMER TO BE ACCURATLY DETERMINED TO ENSURE BM01,BM02 AMD BM08 ARE SUITABLY LAPPED.
3.	BM 14 & 28 CUT LOCALLY AT CROSS GIRDERS.

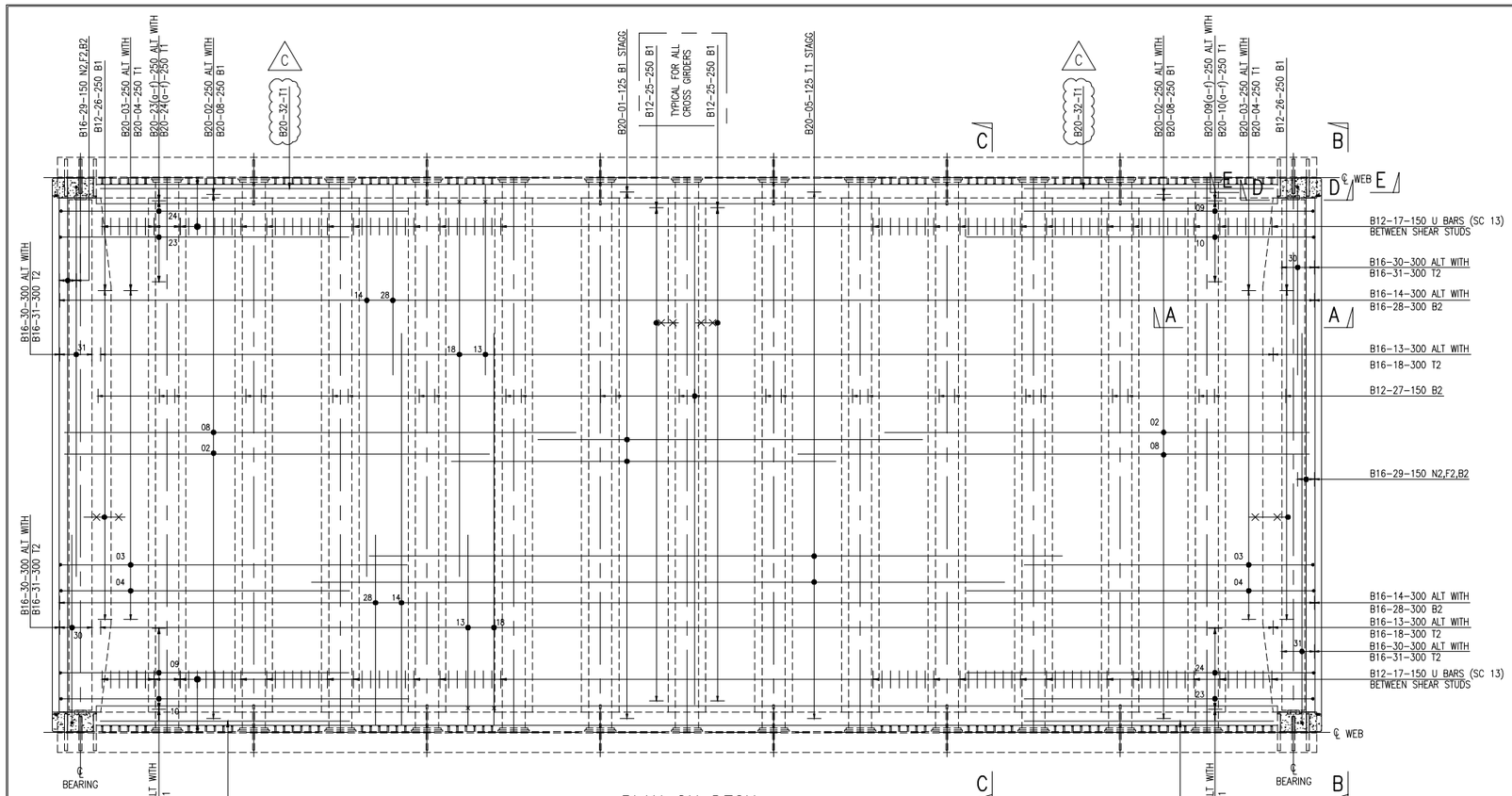

PLAN ON DECK
SCALE 1:50

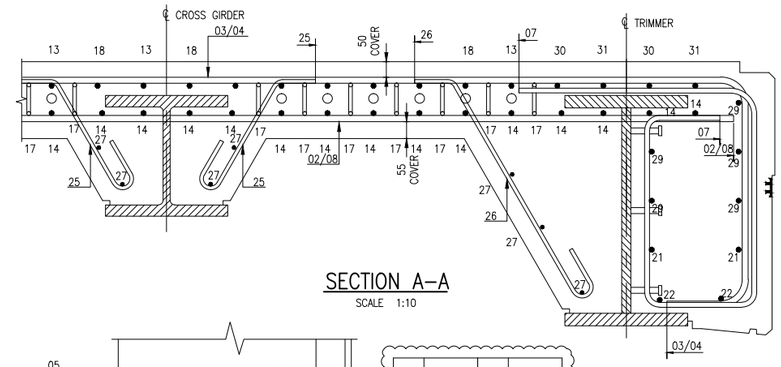

SECTION A-A
SCALE 1:10

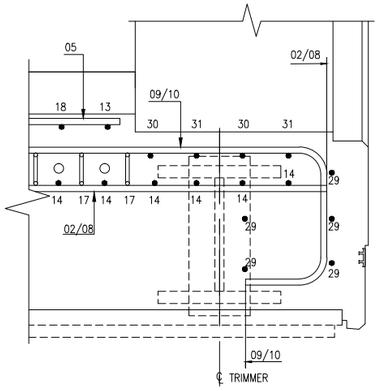

SECTION D-D
SCALE 1:10

BM	SHAPE CODE	BM	SHAPE CODE
01	00	17	13
02	00	18	15
03	21	19	41
04	21	20	NOT USED
05	00	21	00
06	NOT USED	22	15
07	41	23	21
08	00	24	21
09	21	25	99
10	21	26	99
11	NOT USED	27	00
12	11	28	31
13	15	29	00
14	31	30	11
15	NOT USED	31	11
16	00	32	00

C

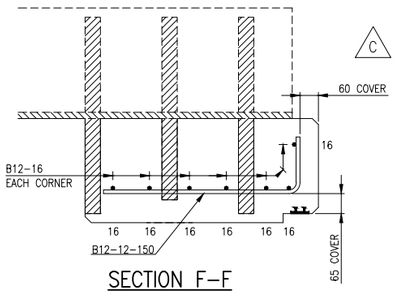

SECTION F-F
SCALE 1:10

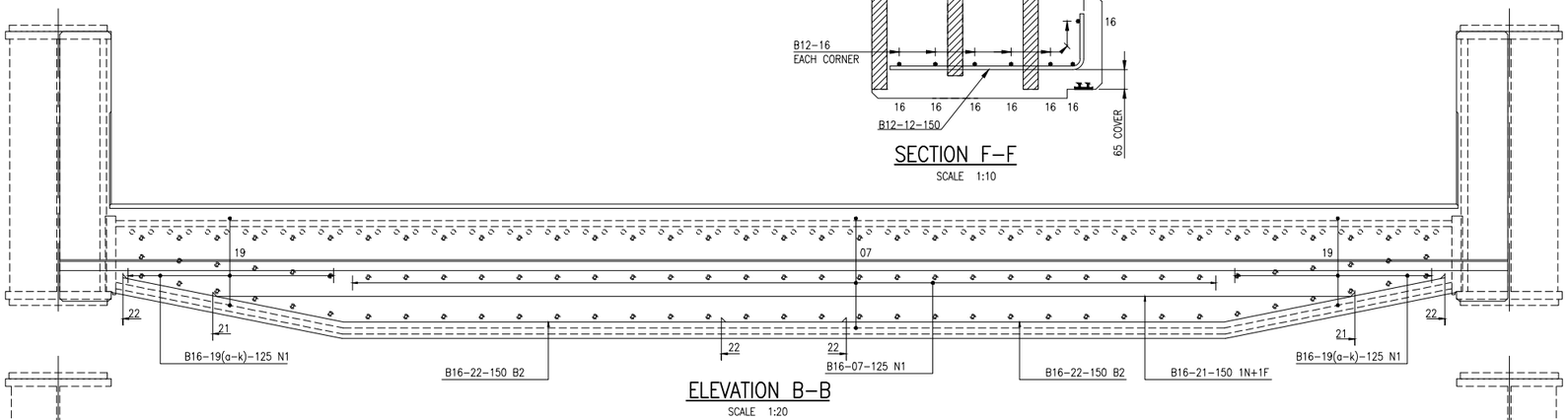

ELEVATION B-B
SCALE 1:20

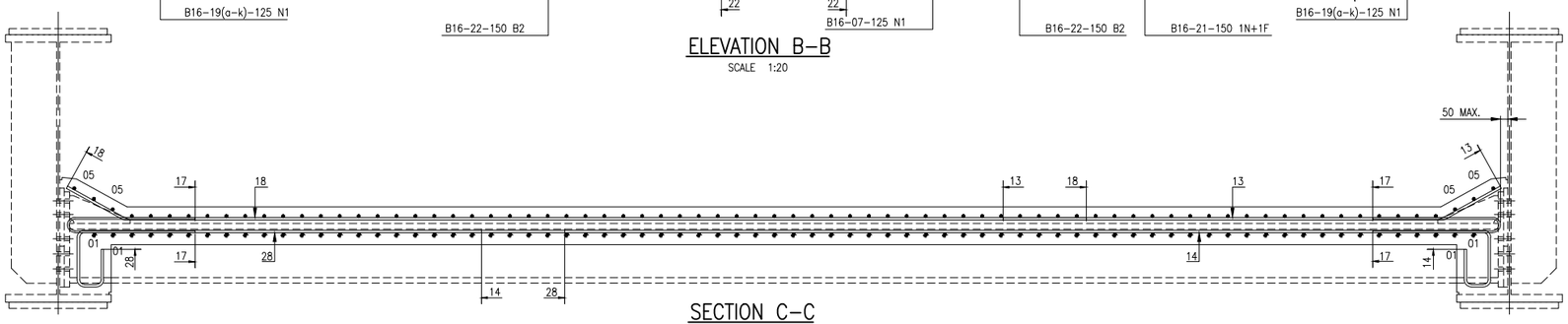

SECTION C-C
SCALE 1:20

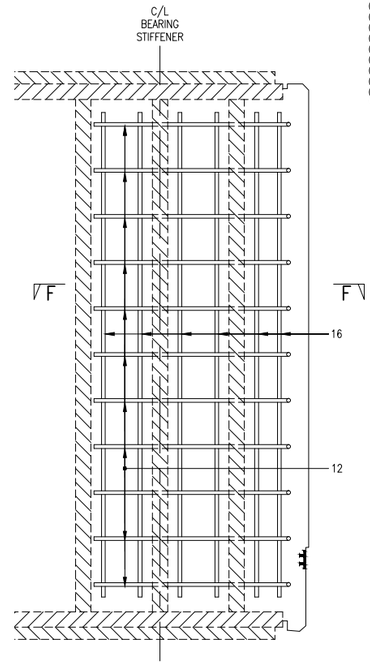

SECTION E-E
SCALE 1:10

Rev	Date	Description of revision	Design'd	C'kd
C	JUNE 13	REBAR AMENDED	NN	RES
B	MAY 10	EUROCODE ISSUE	LZ	IP
A	18.09.09	FIRST ISSUE	LZ	IP
P1	28.04.09	INDEPENDENT CHECK	LZ	IP

NetworkRail
KINGS PLACE
90, York Way
London. N1 9AG
Tel: 0203-3569-596

Approved				
	Name	Position	Signature	Date

Master copy with original signatures held by Network Rail HQ CIVIL ENGINEERING STANDARD DESIGN

© COPYRIGHT NETWORK RAIL 2011

'E' TYPE UNDERBRIDGE STANDARD DRAWINGS

REINFORCEMENT DETAILS DOUBLE TRACK SQUARE FILLER BEAM FLOOR

Scale AS SHOWN

Drawing Number NR/CIV/SD/1564 B

Documents
Document Sharing Hub
Copyright Network Rail
Provided by IHS under license with Network Rail
No reproduction or networking permitted without license from IHS
Licensee=Weston Williamson/5989497001, User=sam, albett
Not for Resale, 03/27/2016 19:28:35 MDT
Full document details: NR NR-CIV-SD-1564 ISSUE C 2013