Supplementary Information

The following information is associated with Network Rail Standard:
NR CIV/SD/1566 Rev C

Additional Content Access

Click the link below to access CAD version of this drawing.

CAD Drawing

- CIV/SD/1566

If you have any questions, or need assistance, please contact **IHS Support**

Information accessed via the links above is the property of the Copyright holder

IHS Additional Content Page

Documents
Document Sharing Hub

Copyright Network Rail
Provided by IHS under license with Network Rail
No reproduction or networking permitted without license from IHS
Full document details: NR NR-CIV-SD-1566 ISSUE C 2013

Licensee=Weston Williamson/5989497001, User=sam, albett
Not for Resale, 03/27/2016 19:30:20 MDT

DRAWING No. NR/CIV/SD/1566

NOTES

1. REFER TO DRAWING NO. NR/CIV/SD/1560 FOR NOTES.
2. NOTE TO SCHEME DESIGNER: POSITION OF HOLES IN CROSS GIRDERS AND TRIMMER TO BE ACCURATLY DETERMINED TO ENSURE BM01,BM02 AMD BM08 ARE SUITABLY LAPPED.
3. BM14 & 21 CUT LOCALLY AT CROSS GIRDERS.
4. T2 AND T3 GROUPED AROUND TRIMMED CROSS GIRDER SPLICES.

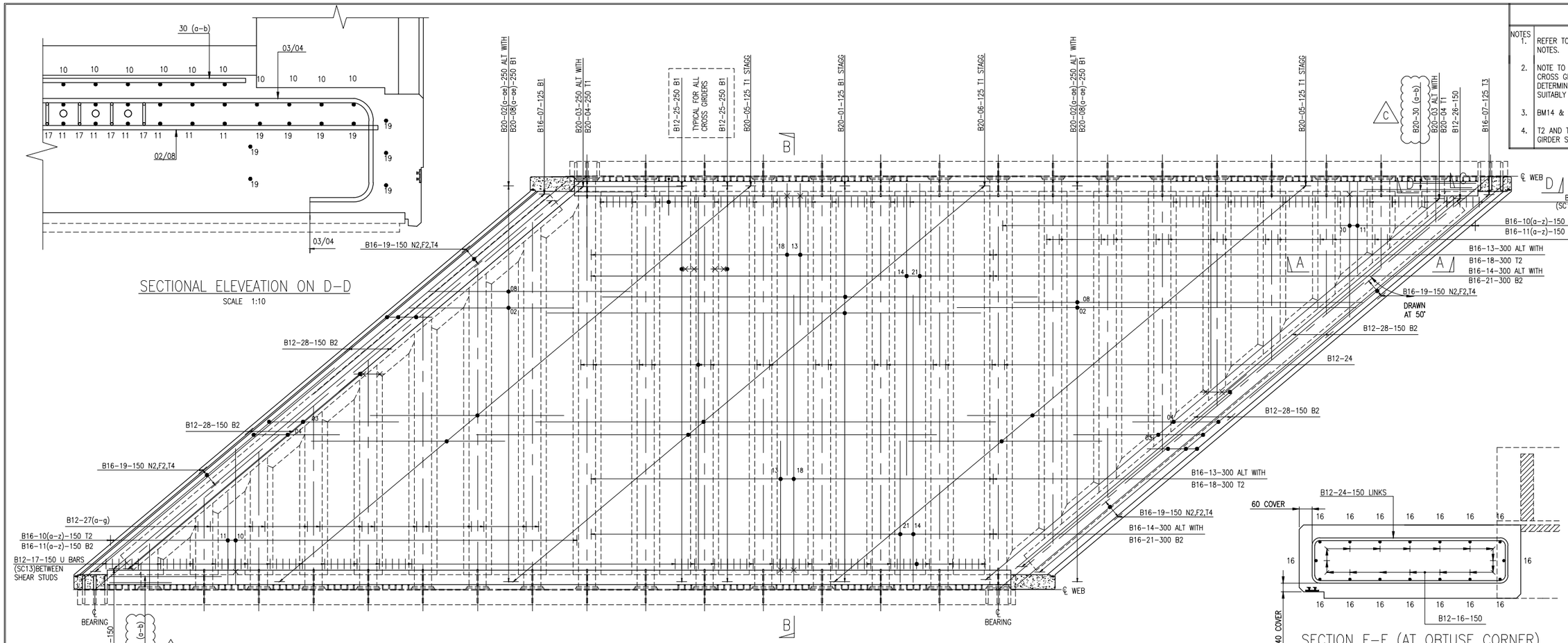

SECTIONAL ELEVEATION ON D-D
SCALE 1:10

PLAN ON DECK
SCALE 1:50

SECTION F-F (AT OBTUSE CORNER)
SCALE 1:10

BM	SHAPE CODE	BM	SHAPE CODE
01	00	16	00
02	00	17	13
03	21	18	15
04	21	19	00
05	00	20	51
06	00	21	31
07	41	22	NOT USED
08	00	23	NOT USED
09	NOT USED	24	51
10	15	25	99
11	31	26	99
12	11	27	00
13	15	28	00
14	31	29	21
15	NOT USED	30	00

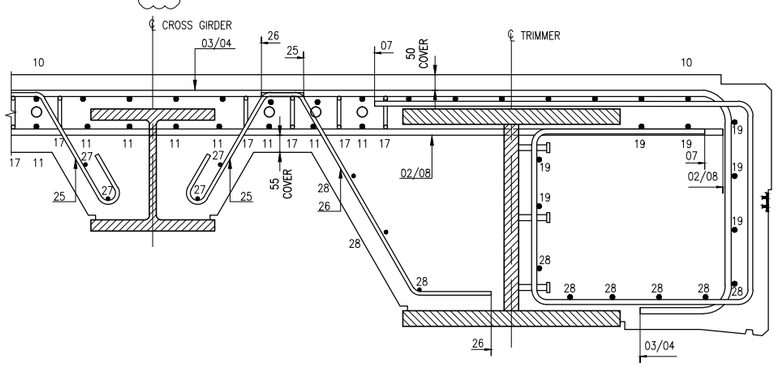

SECTION A-A
SCALE 1:10

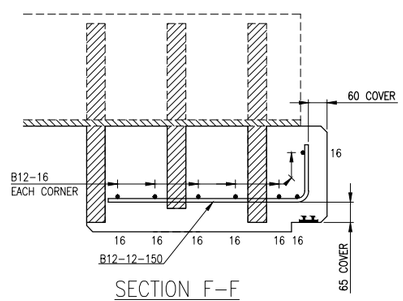

SECTION F-F
SCALE 1:10

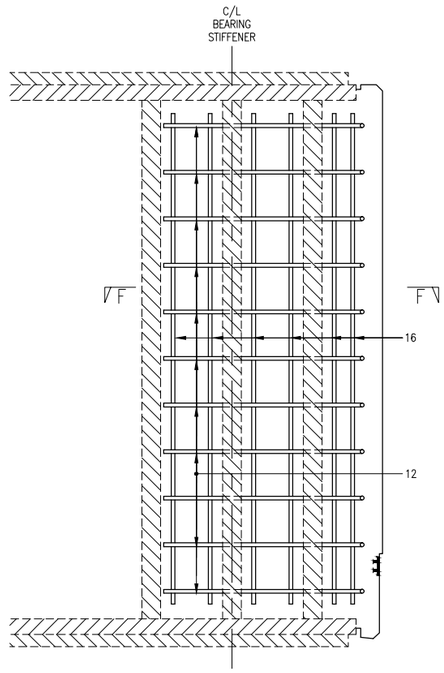

SECTION E-E
SCALE 1:10

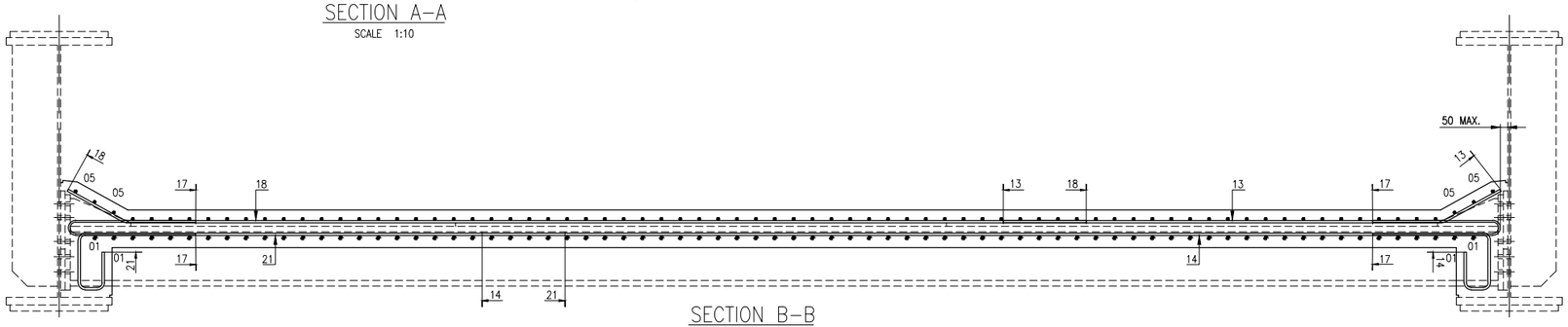

SECTION B-B
SCALE 1:20

Rev	Date	Description of revision	Design'd	C'kd
C	JUN 13	HAZARD TRIANGLES ADDED	MV	RES
B	MAY 10	EUROCODE ISSUE	LZ	IP
A	18.09.09	FIRST ISSUE	LZ	IP
P1	28.04.09	INDEPENDENT CHECK	LZ	IP

NetworkRail
KINGS PLACE
90, York Way
London. N1 9AG
Tel: 0203-3569-596

Approved				
	Name	Position	Signature	Date

Master copy with original signatures held by Network Rail HQ CIVIL ENGINEERING STANDARD DESIGN

© COPYRIGHT NETWORK RAIL 2011

'E' TYPE UNDERBRIDGE STANDARD DRAWINGS

REINFORCEMENT DETAILS
DOUBLE TRACK
25° TO 50° FILLER BEAM
FLOOR

Scale	AS SHOWN
Drawing Number	NR/CIV/SD/1566 C

Documents
Document Sharing Hub
Copyright Network Rail
Provided by IHS under license with Network Rail
No reproduction or networking permitted without license from IHS
Licensee=Weston Williamson/5989497001, User=sam, albett
Not for Resale, 03/27/2016 19:30:20 MDT
Full document details: NR NR-CIV-SD-1566 ISSUE C 2013