The following information is associated with Network Rail Standard:
NR CIV/SD/1573 Rev B

Additional Content Access

Click the link below to access CAD version of this drawing.

CAD Drawing

- CIV/SD/1573

If you have any questions, or need assistance, please contact **IHS Support**

Information accessed via the links above is the property of the Copyright holder

IHS Additional Content Page

--`,,,,,,`,,,,,,`,,`,,,,,,,,`-`-`,,`,,`,`,,`---

Documents
Document Sharing Hub

Copyright Network Rail
Provided by IHS under license with Network Rail
No reproduction or networking permitted without license from IHS
Full document details: NR NR-CIV-SD-1573 ISSUE B 2010

Licensee=Weston Williamson/5989497001, User=sam, albett
Not for Resale, 03/27/2016 21:27:17 MDT

Copyright Network Rail
Provided by IHS under license with Network Rail
No reproduction or networking permitted without license from IHS
Full document details: NR NR-CIV-SD-1573 ISSUE B 2010
Licensee=Weston Williamson/5989497001, User=sam.albett
Not for Resale, 03/27/2016 21:27:17 MDT

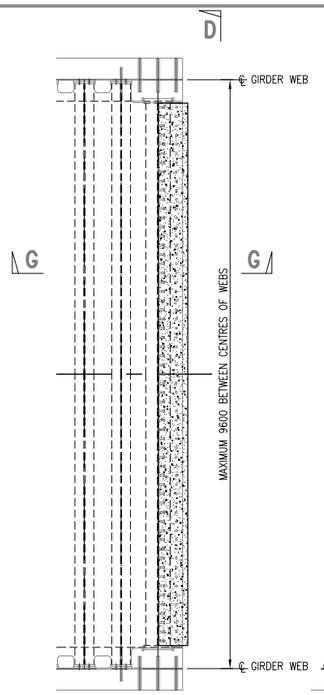

SECTIONAL PLAN ON A–A
SQUARE DECK OTHER
END HANDED
SCALE 1:50

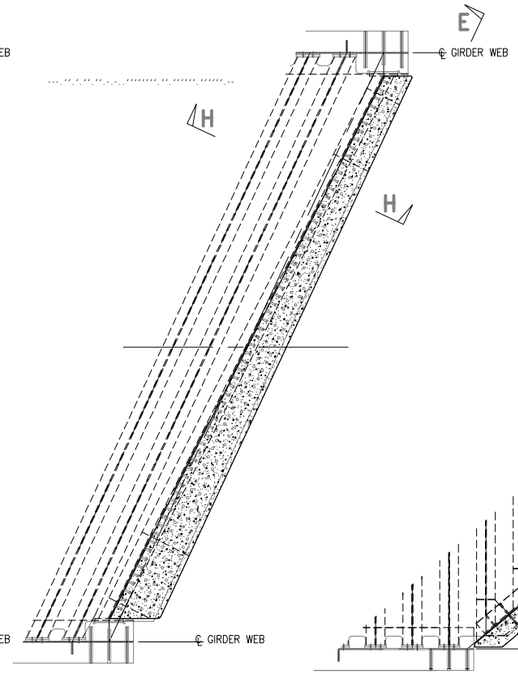

SECTIONAL PLAN ON B–B
SKEW 0° TO 25°
SCALE 1:50

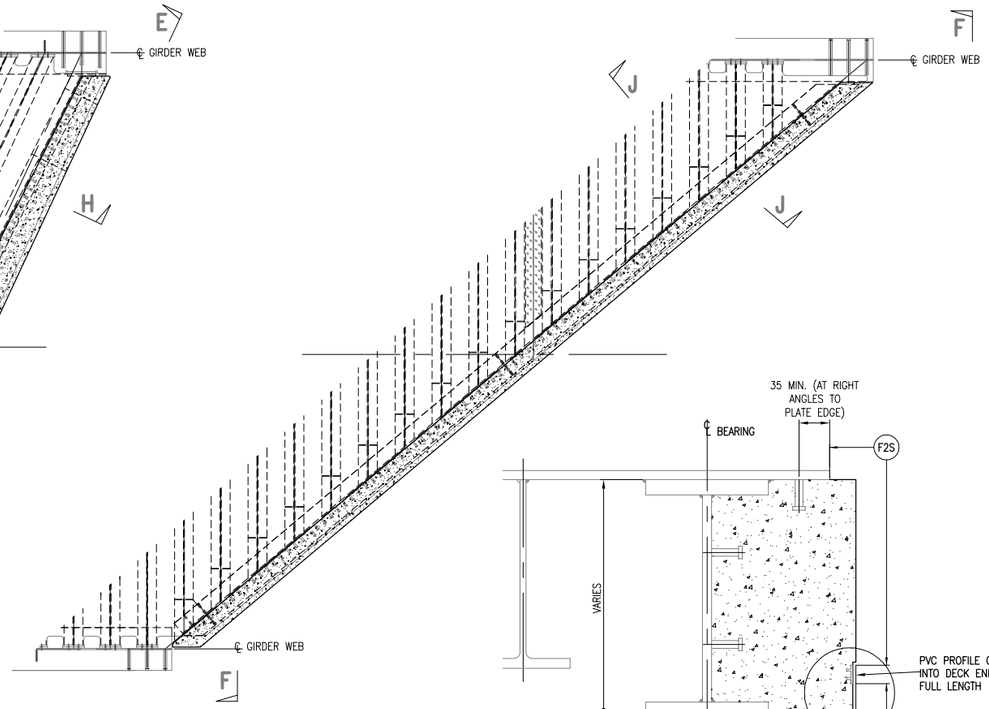

SECTIONAL PLAN ON C–C
SKEW 25° TO 50°
SCALE 1:50

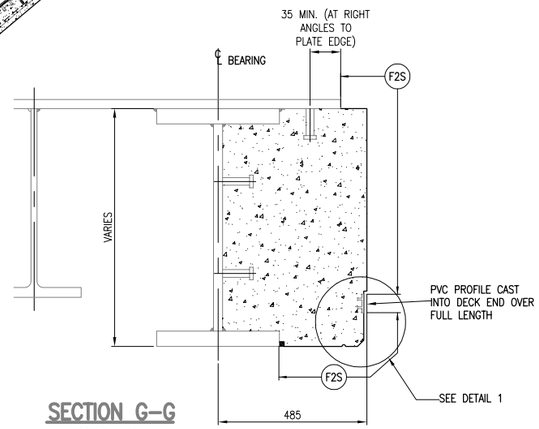

SECTION G–G
SCALE 1:10

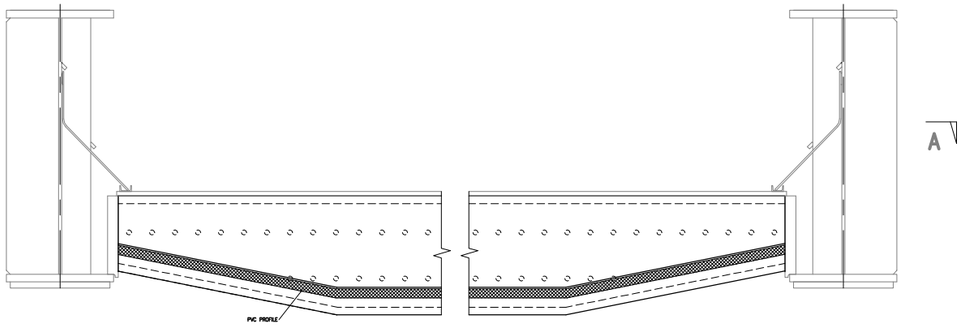

ELEVATION D–D
SCALE 1:20

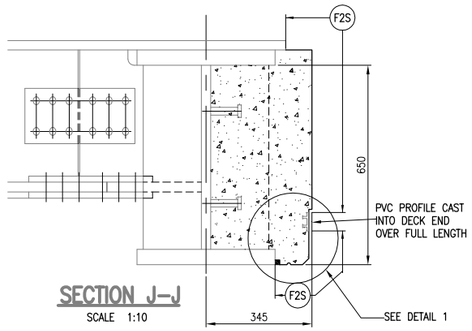

SECTION J–J
SCALE 1:10

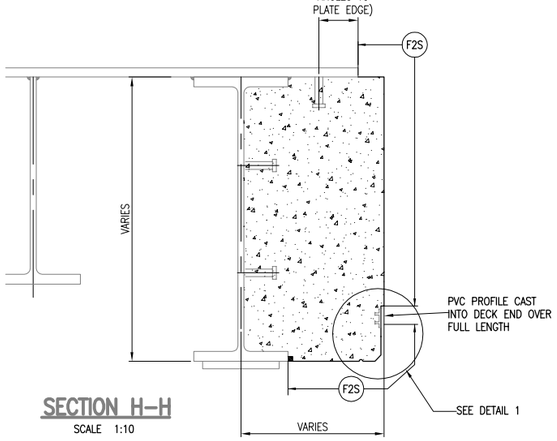

SECTION H–H
SCALE 1:10

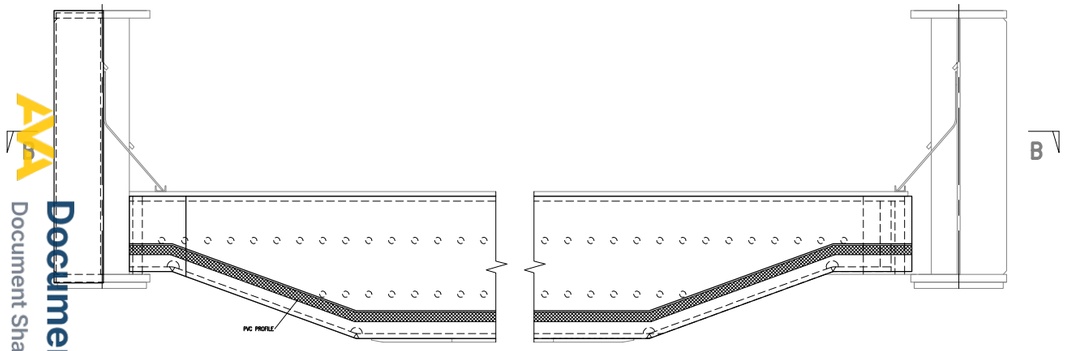

ELEVATION E–E
SCALE 1:20

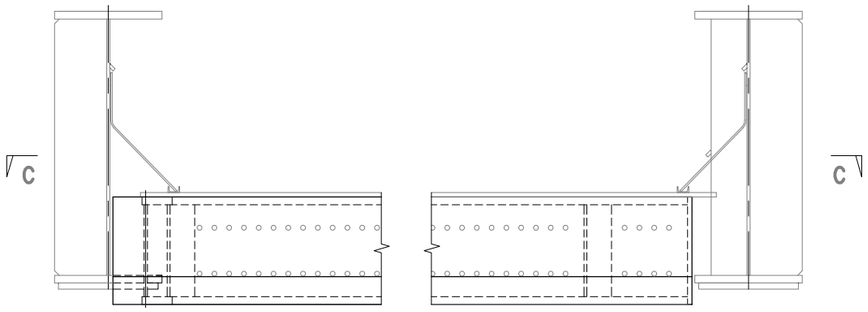

ELEVATION F–F
SCALE 1:20

DRAWING No. NR/CIV/SD/1573

NOTES

1. REFER TO DRAWING NR/CIV/SD/1560 FOR NOTES.

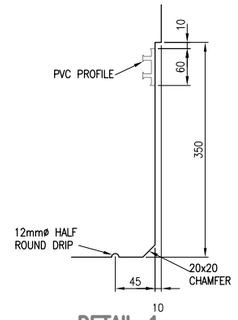

DETAIL 1
SCALE 1:5

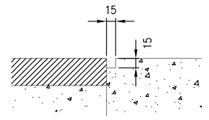

DETAIL 2
SCALE 1:5

Rev	Date	Description of revision	Design'd	C'kd
B	MAY 10	EUROCODE ISSUE	DG	IP
A	18.09.09	FIRST ISSUE	DG	IP
P1	04.02.09	INDEPENDENT CHECK	DG	IP

Network Rail

Network Rail Infrastructure Ltd
Registered Office:
Kings Place
90 York Way
London
N1 9AG

Approved	Name	Position	Signature	Date
	Paul Clark	Snr. Proj. Eng. Manager Infrastructure Investment Building and Civils	P.C.	MAY 10

Master copy with original signatures held by Network Rail HQ
CIVIL ENGINEERING STANDARD DESIGN

© COPYRIGHT NETWORK RAIL 2009

'E' TYPE UNDERBRIDGE
STANDARD DRAWINGS

CONCERETE DETAILS FOR
STEEL FLOOR

B

Scale	AS SHOWN	
Drawing Number	NR/CIV/SD/1573	B

AVA Documents
Document Sharing Hub