Supplementary Information

The following information is associated with Network Rail Standard:
NR CIV/SD/1722 Rev B

Additional Content Access

Click the link below to access CAD version of this drawing.

CAD Drawing

- CIV/SD/1722

If you have any questions, or need assistance, please contact **IHS Support**

Information accessed via the links above is the property of the Copyright holder

IHS Additional Content Page

Documents
Document Sharing Hub

Copyright Network Rail
Provided by IHS under license with Network Rail
No reproduction or networking permitted without license from IHS
Full document details: NR NR-CIV-SD-1722 ISSUE B 2010

Licensee=Weston Williamson/5989497001, User=sam, albett
Not for Resale, 03/27/2016 21:27:12 MDT

Full document details: NR NR-CIV-SD-1722 ISSUE B 2010

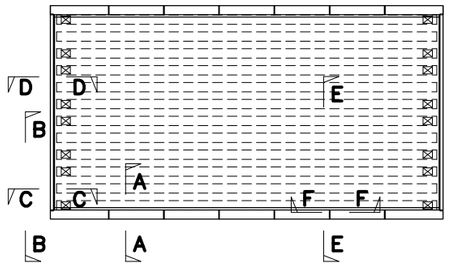

SECTION LOCATION KEY PLAN
SCALE 1:100

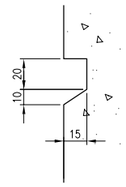

DETAIL 1 WATERPROOFING TUCK DETAIL
SCALE 1:2

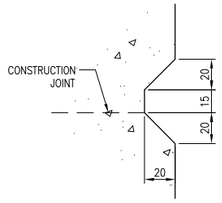

DETAIL 2
SCALE 1:2

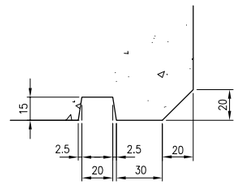

DETAIL 3
SCALE 1:2

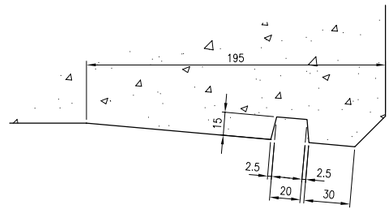

DETAIL 4
SCALE 1:2

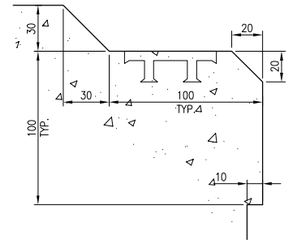

DETAIL 5
SCALE 1:2

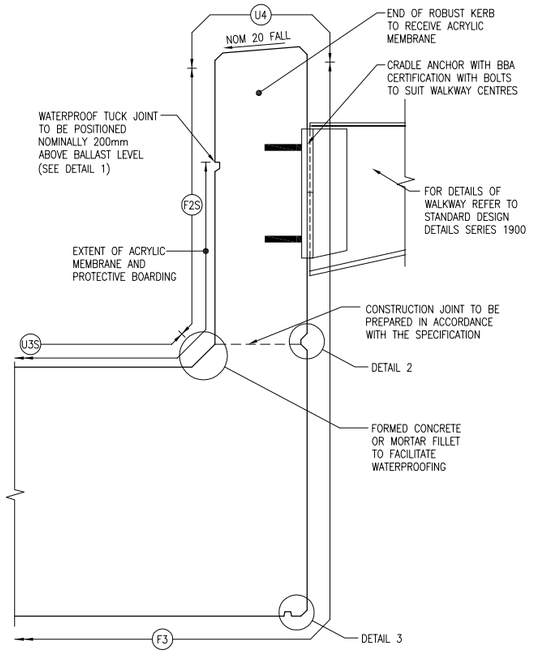

SECTION A–A
SHOWING TYPICAL FINISHES
SCALE 1:10

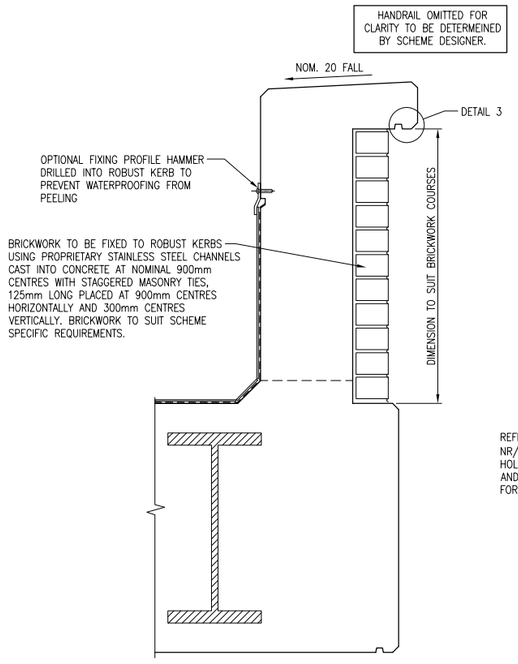

ALTERNATIVE INSITU ARRANGEMENT (BRICK CLADDING) BETWEEN ROBUST KERB AND REINFORCED CONCRETE SLAB
SCALE 1:10

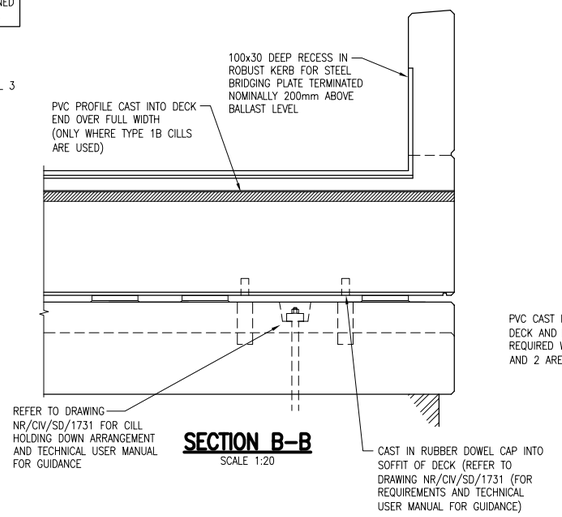

SECTION B–B
SCALE 1:20

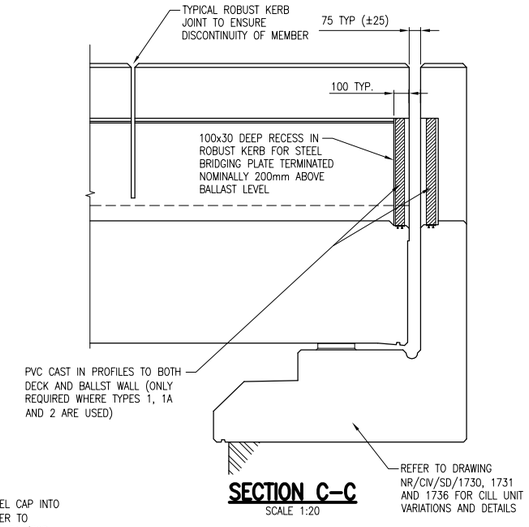

SECTION C–C
SCALE 1:20

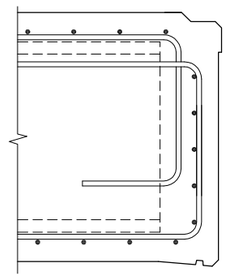

SECTION D–D
SHOWING TYPICAL INDICTIVE REINFORCEMENT
SCALE 1:10

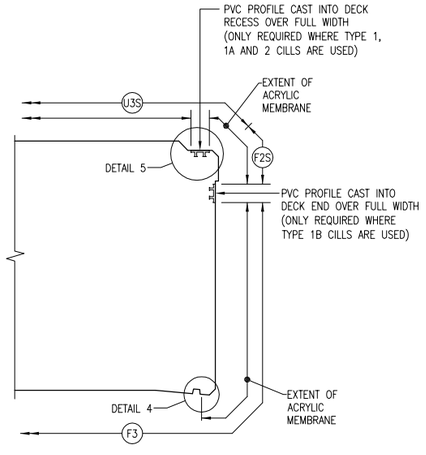

SECTION D–D
SCALE 1:10

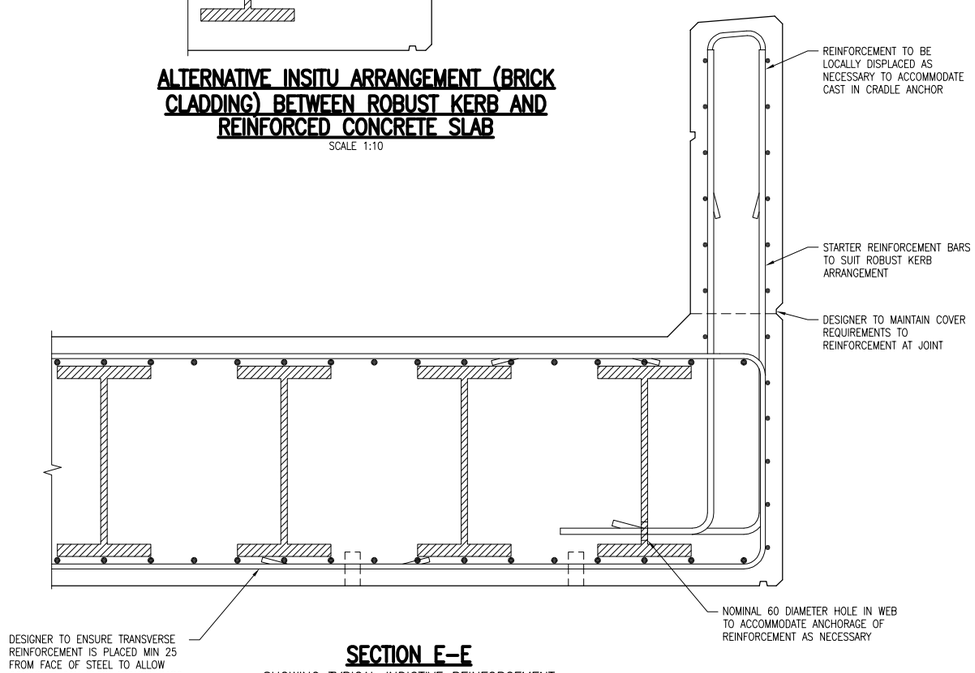

SECTION E–E
SHOWING TYPICAL INDICTIVE REINFORCEMENT
SCALE 1:10

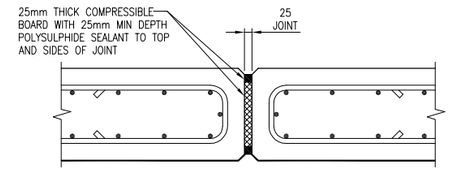

SECTION F–F
SHOWING TYPICAL REINFORCEMENT
SCALE 1:10

DRAWING No. NR/CIV/SD/1722

NOTES

1. THIS DRAWING IS TO BE READ IN CONJUNCTION WITH THE GENERAL ARRANGEMENT DRAWING NR/CIV/SD/1712.
2. THE INTENTION OF THIS DRAWING IS TO PROVIDE GENERIC DETAILS OF TYPICAL CONCRETE FINISHES, WATERPROOFING, CONCRETE OUTLINES AND REINFORCEMENT DETAILS.
3. FOR DETAILS OF HOLDING DOWN AND TRANSIENT LOAD RESTRAINTS REFER TO DRAWING NR/CIV/SD/1733 AND 1736.

Rev	Date	Description of revision	Design'd	C'kd
B	APR 10	EUROCODE ISSUE	MK	AGW
A	APR 10	FIRST ISSUE	MK	AGW
P2	18.06.09	NOTES AND DETAILS REVISED	MK	AGW
P1	27.03.09	DRAFT FOR REVIEW	MK	AGW

Network Rail

Network Rail Infrastructure Ltd
Registered Office:
Kings Place
90 York Way
London
N1 9AG

Approved	Name	Position	Signature	Date
	Paul Clark	Snr. Proj. Eng. Manager Infrastructure Investment Building and Civils	P.C.	APR 10

Master copy with original signatures held by Network Rail HQ CIVIL ENGINEERING STANDARD DESIGN

© COPYRIGHT NETWORK RAIL 2009

CONCRETE UNDERBRIDGE STANDARD DRAWINGS

CAST ON SITE FULLY ENCASED FILLER BEAM DECK DETAILS

Scale	AS SHOWN	
Drawing Number	NR/CIV/SD/1722	B

Documents
Document Sharing Hub

Licensee=Weston Williamson/5989497001, User=sam, albett
Not for Resale, 03/27/2016 21:27:12 MDT

Copyright Network Rail
Provided by IHS under license with Network Rail
No reproduction or networking permitted without license from IHS