The following information is associated with Network Rail Standard:
NR CIV/SD/1723 Rev B

Additional Content Access

Click the link below to access CAD version of this drawing.

CAD Drawing

- CIV/SD/1723

If you have any questions, or need assistance, please contact **IHS Support**

Information accessed via the links above is the property of the Copyright holder

IHS Additional Content Page

Documents
Document Sharing Hub

Copyright Network Rail
Provided by IHS under license with Network Rail
No reproduction or networking permitted without license from IHS
Full document details: NR NR-CIV-SD-1723 ISSUE B 2010

Licensee=Weston Williamson/5989497001, User=sam, albett
Not for Resale, 03/27/2016 21:27:53 MDT

Full document details: NR NR-CIV-SD-1723 ISSUE B 2010

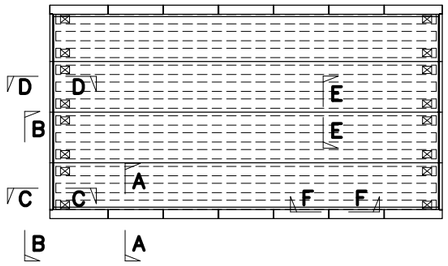

SECTION LOCATION KEY PLAN

SCALE 1:100

(REFER TO DRAWING NR/CIV/SD/1720 FOR TYPICAL SECTIONS A–A, D–D AND F–F)

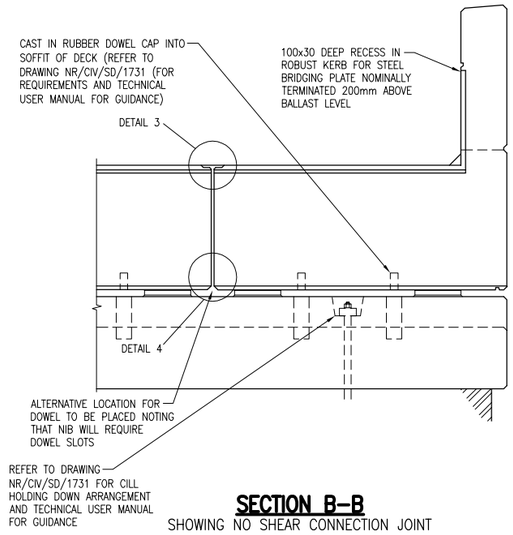

SECTION B–B

SHOWING NO SHEAR CONNECTION JOINT

SCALE 1:20

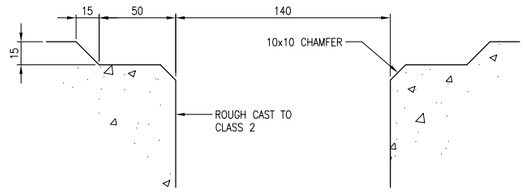

DETAIL 1

(IN SITU STITCH JOINT)

SCALE 1:2

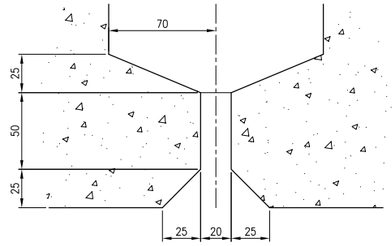

DETAIL 2

(IN SITU STITCH JOINT)

SCALE 1:2

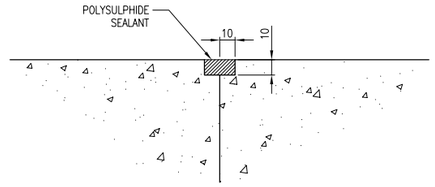

DETAIL 5

SCALE 1:2

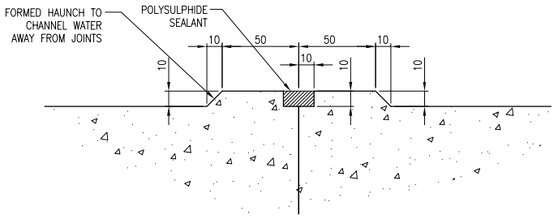

ALTERNATIVE DETAIL 5

SCALE 1:2

DRAWING No. NR/CIV/SD/1723

NOTES

1. THIS DRAWING IS TO BE READ IN CONJUNCTION WITH THE GENERAL ARRANGEMENT DRAWING NR/CIV/SD/1713.
2. THE INTENTION OF THIS DRAWING IS TO PROVIDE GENERIC DETAILS OF TYPICAL CONCRETE FINISHES, WATERPROOFING, CONCRETE OUTLINES AND REINFORCEMENT DETAILS.
3. FOR DETAILS OF HOLDING DOWN AND TRANSIENT LOAD RESTRAINTS REFER TO DRAWING NR/CIV/SD/1734 AND 1736.
4. REFER TO DRAWING NR/CIV/SD/1720 FOR TYPICAL DETAILS OF CONCRETE FINISHES, JOINT/DRIP AND REINFORCEMENT DETAILS.

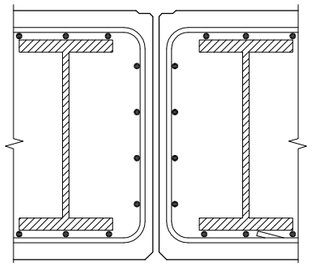

SECTION E–E

SHOWING TYPICAL INDICATIVE REINFORCEMENT FOR NO SHEAR CONNECTION JOINT

SCALE 1:10

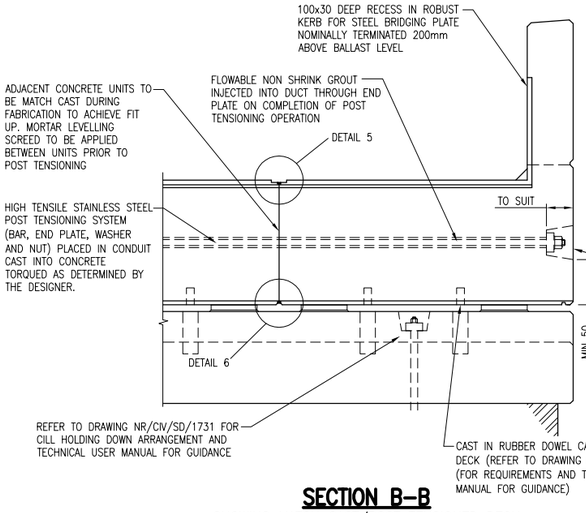

SECTION B–B

SHOWING MATCH CAST/POST TENSIONED DECK

SCALE 1:20

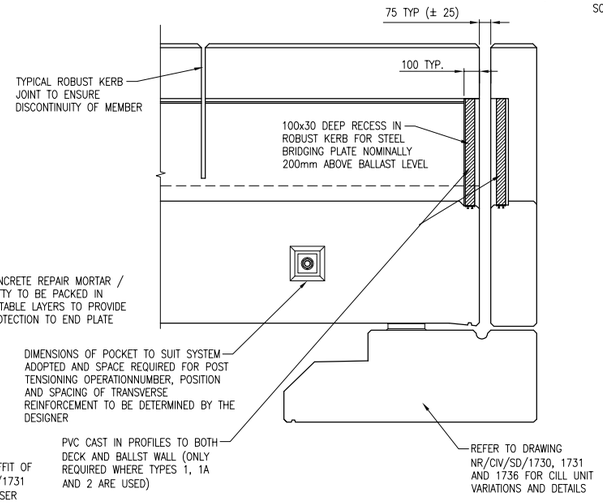

SECTION C–C

SHOWING MATCH CAST / POST TENSIONED DECK

SCALE 1:20

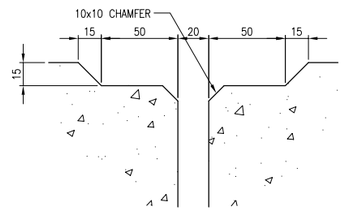

DETAIL 3

(ALTERNATIVE NO SHEAR CONNECTION JOINT)

SCALE 1:2

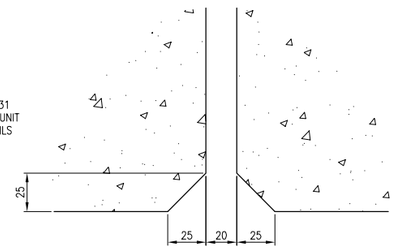

DETAIL 4

(ALTERNATIVE NO SHEAR CONNECTION JOINT)

SCALE 1:2

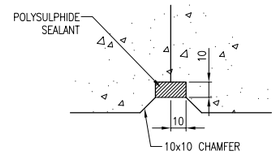

DETAIL 6

SCALE 1:2

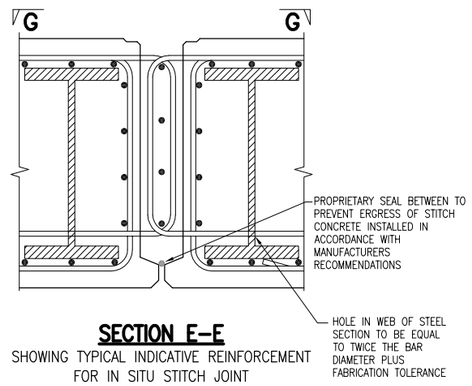

SECTION E–E

SHOWING TYPICAL INDICATIVE REINFORCEMENT FOR IN SITU STITCH JOINT

SCALE 1:10

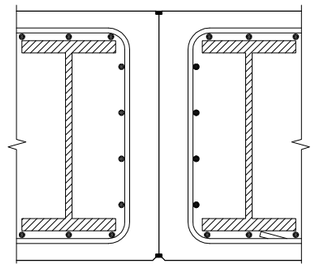

SECTION E–E

SHOWING TYPICAL INDICATIVE REINFORCEMENT FOR MATCH CAST/POST TENSIONED JOINT

SCALE 1:10

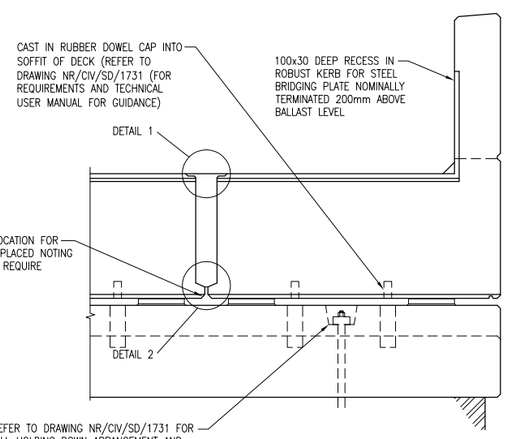

SECTION B–B

SHOWING IN SITU STITCH CONNECTION JOINT

SCALE 1:20

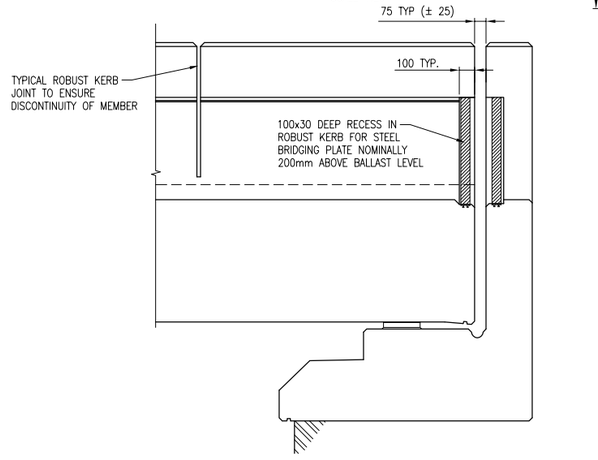

SECTION C–C

SHOWING NO SHEAR CONNECTION JOINT

(IN SITU STITCH JOINT SIMILAR)

SCALE 1:20

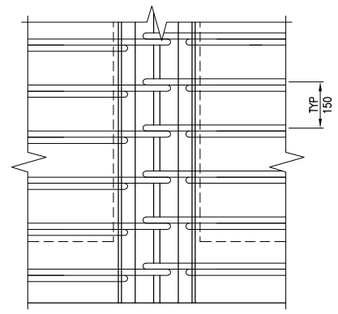

PLAN ON G–G

SHOWING TYPICAL INDICATIVE REINFORCEMENT FOR IN SITU STITCH JOINT

SCALE 1:10

Rev	Date	Description of revision	Design'd	C'kd
B	APR 10	EUROCODE ISSUE	MK	AGW
A	APR 10	FIRST ISSUE	MK	AGW
P2	18.06.09	NOTES AND DETAILS REVISED	MK	AGW
P1	27.03.09	DRAFT FOR REVIEW	MK	AGW

Network Rail

Network Rail Infrastructure Ltd
Registered Office:
Kings Place
90 York Way
London
N1 9AG

	Name	Position	Signature	Date
Approved	Paul Clark	Snr. Proj. Eng. Manager Infrastructure Investment Building and Civils	P.C.	APR 10

Master copy with original signatures held by Network Rail HQ
CIVIL ENGINEERING STANDARD DESIGN

© COPYRIGHT NETWORK RAIL 2009

CONCRETE UNDERBRIDGE STANDARD DRAWINGS

PRE–CAST OFF SITE FULLY ENCASED FILLER BEAM DECK DETAILS

Scale	AS SHOWN
Drawing Number	NR/CIV/SD/1723 B

Documents
Document Sharing Hub

Copyright Network Rail
Provided by IHS under license with Network Rail
No reproduction or networking permitted without license from IHS

Licensee=Weston Williamson/5989497001, User=sam, albett
Not for Resale, 03/27/2016 21:27:53 MDT