Supplementary Information

The following information is associated with Network Rail Standard:
NR CIV/SD/1725 Rev B

Additional Content Access

Click the link below to access CAD version of this drawing.

CAD Drawing

- CIV/SD/1725

If you have any questions, or need assistance, please contact **IHS Support**

Information accessed via the links above is the property of the Copyright holder

IHS Additional Content Page

Documents
Document Sharing Hub

Copyright Network Rail
Provided by IHS under license with Network Rail
No reproduction or networking permitted without license from IHS
Full document details: NR NR-CIV-SD-1725 ISSUE B 2010

Licensee=Weston Williamson/5989497001, User=sam, albett
Not for Resale, 03/27/2016 21:30:38 MDT

Full document details: NR NR-CIV-SD-1725 ISSUE B 2010

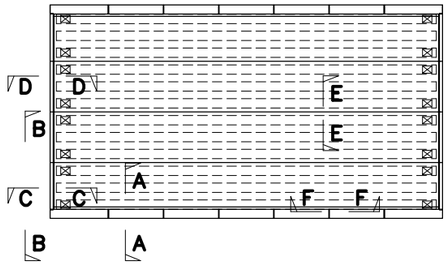

SECTION LOCATION KEY PLAN
SCALE 1:100
(REFER TO DRAWING NR/CIV/SD/1720 FOR TYPICAL SECTIONS A–A, D–D AND F–F)

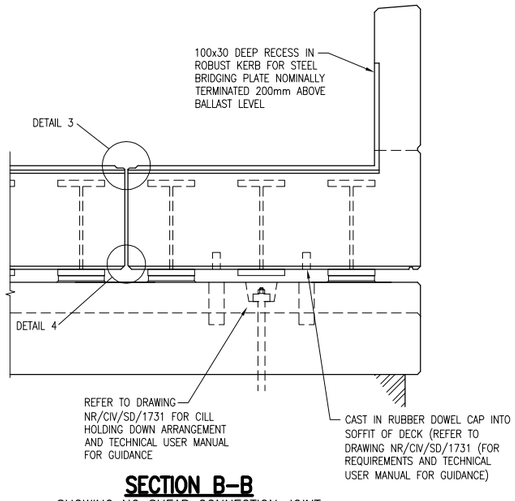

SECTION B–B
SHOWING NO SHEAR CONNECTION JOINT
SCALE 1:20

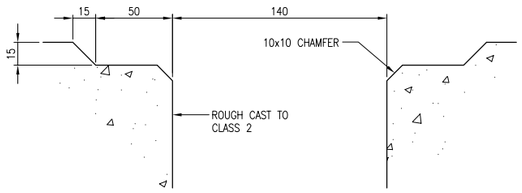

DETAIL 1
(IN SITU STITCH JOINT)
SCALE 1:2

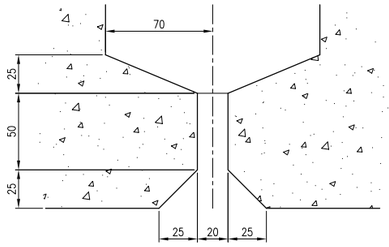

DETAIL 2
(IN SITU STITCH JOINT)
SCALE 1:2

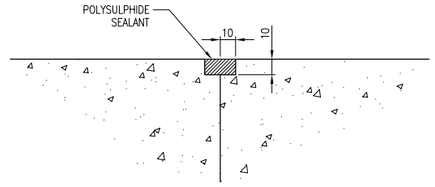

DETAIL 5
SCALE 1:2

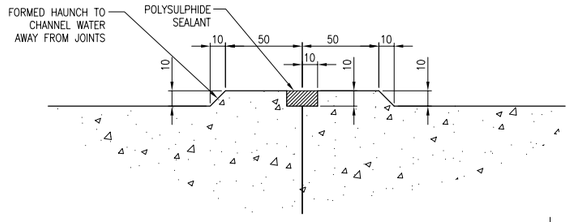

ALTERNATIVE DETAIL 5
SCALE 1:2

DRAWING No. NR/CIV/SD/1725

NOTES

1. THIS DRAWING IS TO BE READ IN CONJUNCTION WITH THE GENERAL ARRANGEMENT DRAWING NR/CIV/SD/1715.
2. THE INTENTION OF THIS DRAWING IS TO PROVIDE GENERIC DETAILS OF TYPICAL CONCRETE FINISHES, WATERPROOFING, CONCRETE OUTLINES AND REINFORCEMENT DETAILS.
3. FOR DETAILS OF HOLDING DOWN AND TRANSIENT LOAD RESTRAINTS REFER TO DRAWING NR/CIV/SD/1732 AND 1736.
4. REFER TO DRAWING NR/CIV/SD/1720 FOR TYPICAL DETAILS OF CONCRETE FINISHES, JOINT/DRIP AND REINFORCEMENT DETAILS.
5. UPON COMPLETION OF SITE PAINTING A RECORD OF THE PROTECTIVE TREATMENT IS TO BE MADE, AND A TABLE PAINTED ON THE STRUCTURE WITH WHITE LETTERING 20mm HIGH x 12mm WIDE IN RT.98 ITEM 5.13.5. PANELS TO GIVE NAME & ADDRESSES OF
   a) STEELWORK FABRICATOR
   b) PAINTING CONTRACTOR
   c) PAINT SUPPLIER
   d) PROTECTIVE TREATMENT APPLIED
   e) COLOUR OF TOP COAT
   f) DATE COMPLETED

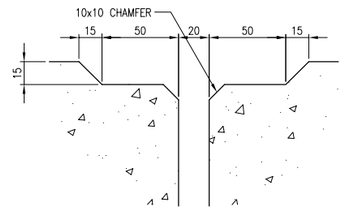

DETAIL 3
(ALTERNATIVE NO SHEAR CONNECTION JOINT)
SCALE 1:2

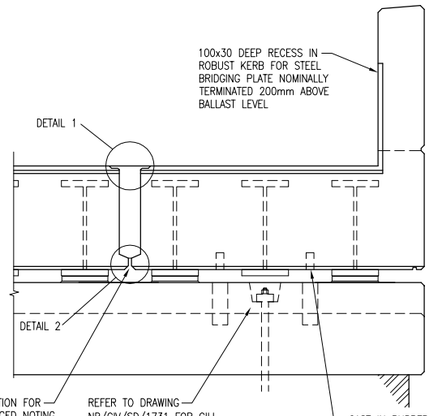

SECTION B–B
SHOWING IN SITU STITCH CONNECTION JOINT
SCALE 1:20

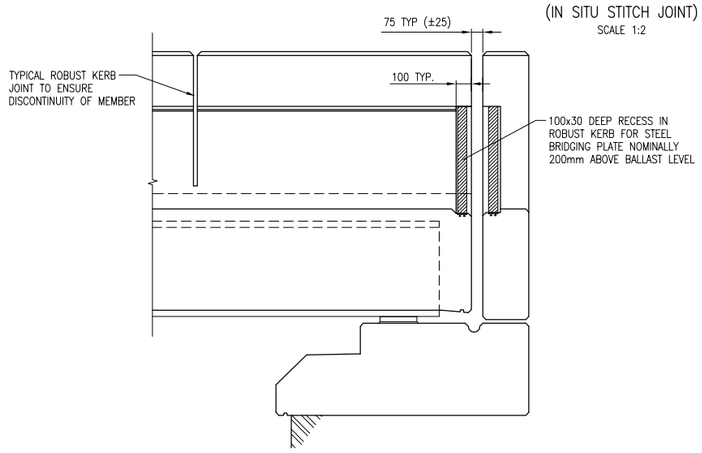

SECTION C–C
SHOWING NO SHEAR CONNECTION JOINT
(IN SITU STITCH JOINT SIMILAR)
SCALE 1:20

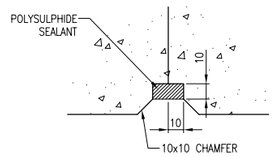

DETAIL 6
SCALE 1:2

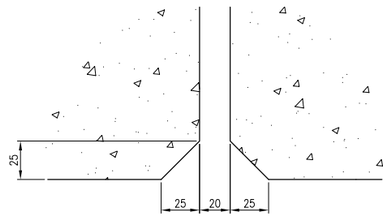

DETAIL 4
(ALTERNATIVE NO SHEAR CONNECTION JOINT)
SCALE 1:2

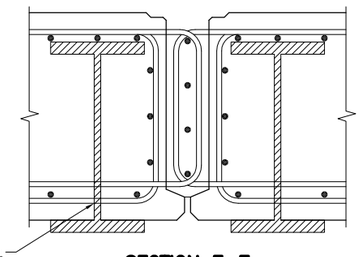

SECTION E–E
SHOWING TYPICAL INDICATIVE REINFORCEMENT
FOR IN SITU STITCH JOINT
SCALE 1:10

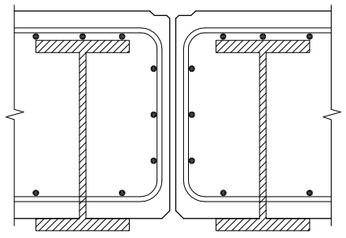

SECTION E–E
SHOWING TYPICAL INDICATIVE REINFORCEMENT
FOR NO SHEAR CONNECTION JOINT
SCALE 1:10

Rev	Date	Description of revision	Design'd	C'kd
B	APR 10	EUROCODE ISSUE	MK	AGW
A	APR 10	FIRST ISSUE	MK	AGW
P2	18.06.09	NOTES AND DETAILS REVISED	MK	AGW
P1	27.03.09	DRAFT FOR REVIEW	MK	AGW

Network Rail Infrastructure Ltd
Registered Office:
Kings Place
90 York Way
London
N1 9AG

Approved	Paul Clark	Snr. Proj. Eng. Manager Infrastructure Investment Building and Civils	P.C.	APR 10
	Name	Position	Signature	Date

Master copy with original signatures held by Network Rail HQ
CIVIL ENGINEERING STANDARD DESIGN
© COPYRIGHT NETWORK RAIL 2009

CONCRETE UNDERBRIDGE STANDARD DRAWINGS

PRE–CAST OFF SITE EXPOSED BOTTOM FLANGE FILLER BEAM DECK DETAILS

Scale	AS SHOWN	
Drawing Number	NR/CIV/SD/1725	B

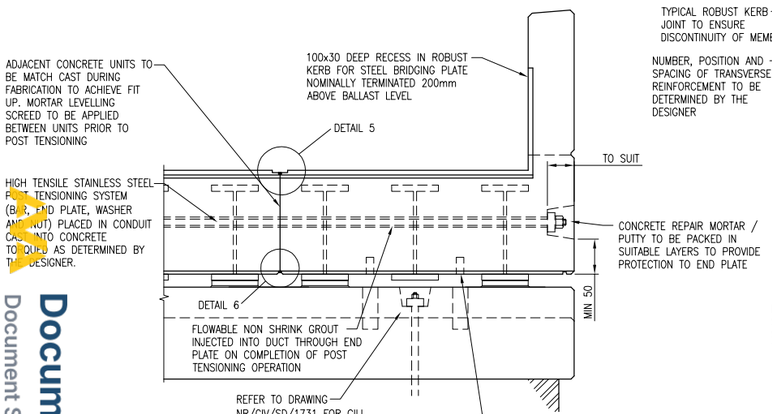

SECTION B–B
SHOWING MATCH CAST/POST TENSIONED DECK
SCALE 1:20

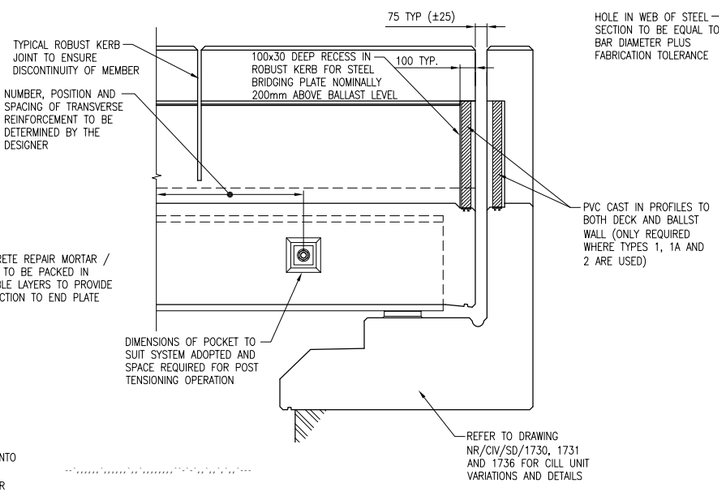

SECTION C–C
SHOWING MATCH CAST / POST TENSIONED DECK
SCALE 1:20

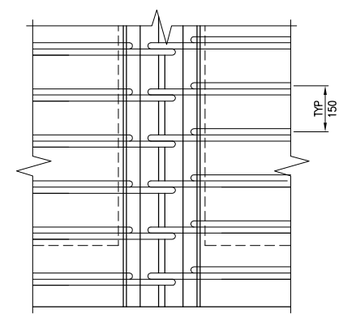

PLAN ON G–G
SHOWING TYPICAL INDICATIVE REINFORCEMENT
FOR IN SITU STITCH JOINT
SCALE 1:10

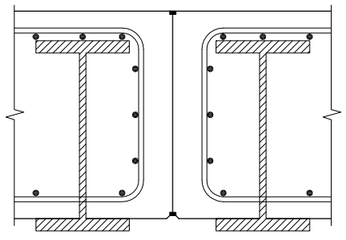

SECTION E–E
SHOWING TYPICAL INDICATIVE REINFORCEMENT
FOR MATCH CAST/POST TENSIONED JOINT
SCALE 1:10

Documents
Document Sharing Hub

Licensee=Weston Williamson/5989497001, User=sam, albett
Not for Resale, 03/27/2016 21:30:38 MDT

Copyright Network Rail
Provided by IHS under license with Network Rail
No reproduction or networking permitted without license from IHS