Supplementary Information

The following information is associated with Network Rail Standard:
NR CIV/SD/1726 Rev B

Additional Content Access

Click the link below to access CAD version of this drawing.

CAD Drawing

- CIV/SD/1726

If you have any questions, or need assistance, please contact **IHS Support**

Information accessed via the links above is the property of the Copyright holder

IHS Additional Content Page

Documents
Document Sharing Hub

Copyright Network Rail
Provided by IHS under license with Network Rail
No reproduction or networking permitted without license from IHS
Full document details: NR NR-CIV-SD-1726 ISSUE B 2010

Licensee=Weston Williamson/5989497001, User=sam, albett
Not for Resale, 03/27/2016 21:29:51 MDT

Full document details: NR NR-CIV-SD-1726 ISSUE B 2010

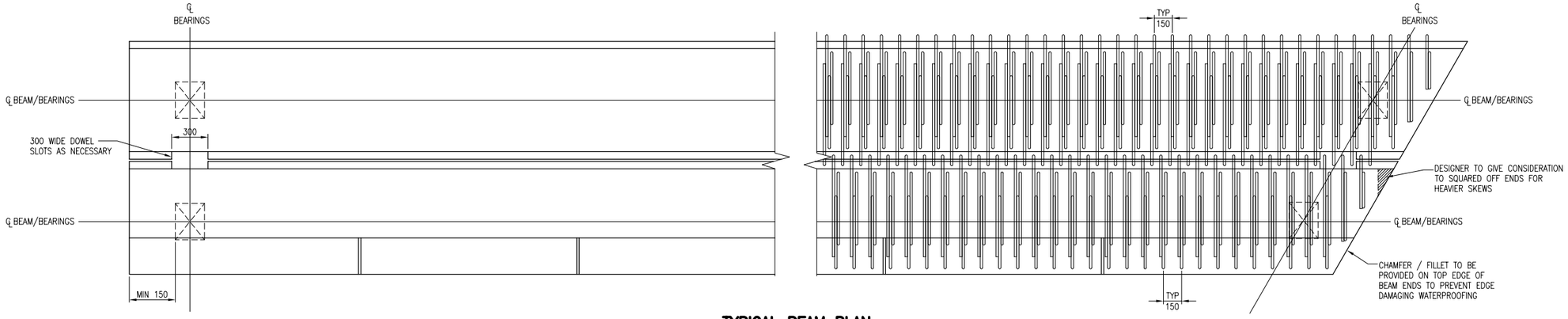

TYPICAL BEAM PLAN
(EDGE AND INTERNAL UNIT SHOWN)
SCALE 1:20

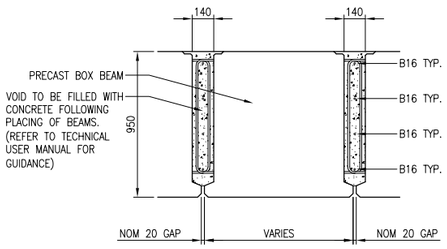

TYPICAL SECTION THROUGH BOX BEAMS
SCALE 1:20

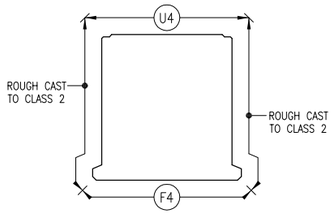

TYPICAL INTERNAL UNIT SECTION SHOWING FINISHES
SCALE 1:20

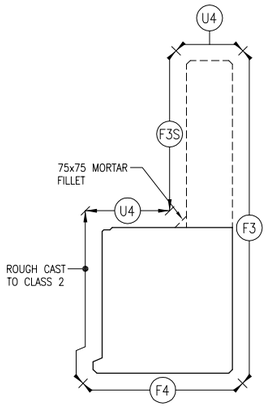

TYPICAL EDGE UNIT SHOWING FINISHES
SCALE 1:20

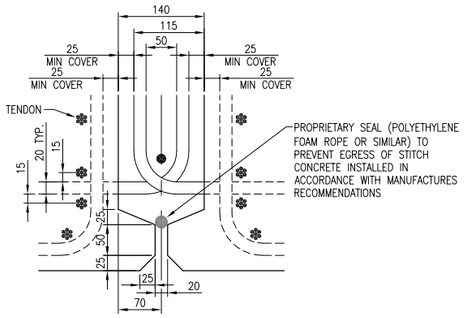

TYPICAL DETAIL SHOWING REINFORCEMENT AND TENDONS ARRANGEMENT
SCALE 1:5

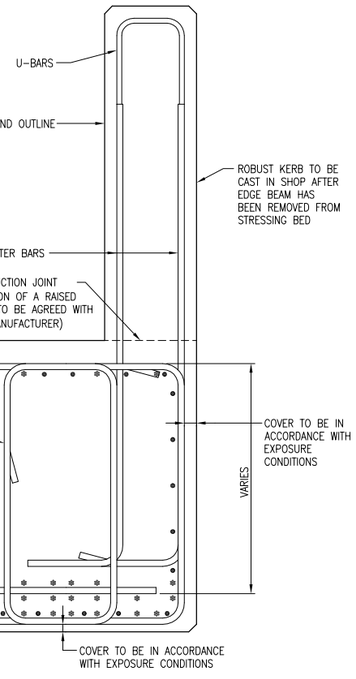

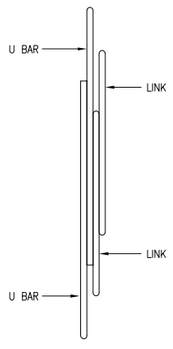

STANDARD INTERNAL UNIT LINK ARRANGEMENT
SCALE 1:10

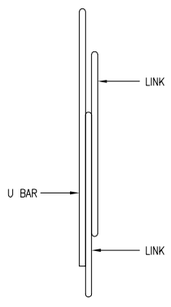

STANDARD EDGE UNIT LINK ARRANGEMENT
SCALE 1:10

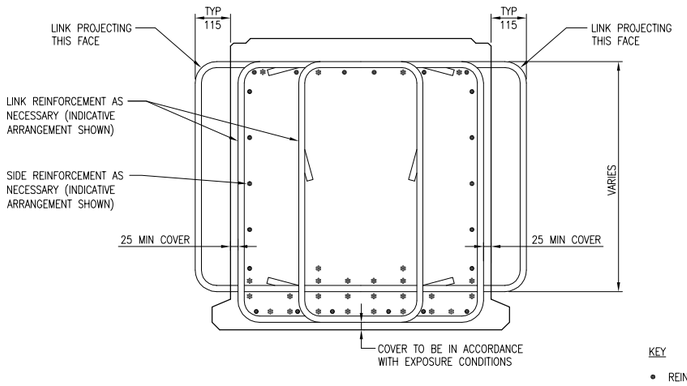

TYPICAL SECTION THROUGH INTERNAL UNIT SHOWING REINFORCEMENT
SCALE 1:10

KEY
- REINFORCEMENT
- PRESTRESSING STRAND

TYPICAL SECTION THROUGH EXTERNAL UNIT SHOWING REINFORCEMENT
SCALE 1:10

DRAWING No. NR/CIV/SD/1726

NOTES
1. THIS DRAWING IS TO BE READ IN CONJUNCTION WITH THE GENERAL ARRANGEMENT DRAWING NR/CIV/SD/1716.
2. THE INTENTION OF THIS DRAWING IS TO PROVIDE GENERIC DETAILS OF TYPICAL CONCRETE OUTLINES, FINISHES, WATERPROOFING AND REINFORCEMENT DETAILS.
3. INDICATIVE STRAND PATTERNS AND REINFORCEMENT HAVE BEEN SHOWN FOR GUIDANCE ONLY. THE DESIGNER IS TO DETERMINE THE STRAND PATTERN AND REINFORCEMENT INCLUDING STRAND DEBONDING POSITIONS AS PART OF THE SITE SPECIFIC SCHEME.
4. PRESTRESSING STRANDS TO COMPLY WITH BS 5896 CLASS 2 RELAXATION, USUALLY 15.2mm DIAMETER, NOTING THAT OTHER STANDARD SIZES ARE AVAILABLE.

Rev	Date	Description of revision	Design'd	C'kd
B	APR 10	EUROCODE ISSUE	MK	AGW
A	APR 10	FIRST ISSUE	MK	AGW
P2	18.06.09	NOTES AND DETAILS REVISED	MK	AGW
P1	27.03.09	DRAFT FOR REVIEW	MK	AGW

Network Rail
Network Rail Infrastructure Ltd
Registered Office:
Kings Place
90 York Way
London
N1 9AG

	Name	Position	Signature	Date
Approved	Paul Clark	Snr. Proj. Eng. Manager Infrastructure Investment Building and Civils	P.C.	APR 10

Master copy with original signatures held by Network Rail HQ CIVIL ENGINEERING STANDARD DESIGN

© COPYRIGHT NETWORK RAIL 2009

CONCRETE UNDERBRIDGE STANDARD DRAWINGS

PRE-CAST OFF SITE PRE-STRESSED SOLID BOX BEAM DECK DETAILS

Scale: AS SHOWN

Drawing Number: NR/CIV/SD/1726 B

AVA Documents
Document Sharing Hub

Licensee=Weston Williamson/5989497001, User=sam, albett
Not for Resale, 03/27/2016 21:29:51 MDT

Copyright Network Rail
Provided by IHS under license with Network Rail
No reproduction or networking permitted without license from IHS