Supplementary Information

The following information is associated with Network Rail Standard:
NR CIV/SD/1733 Rev B

Additional Content Access

Click the link below to access CAD version of this drawing.

CAD Drawing

- CIV/SD/1733

If you have any questions, or need assistance, please contact **IHS Support**

Information accessed via the links above is the property of the Copyright holder

IHS Additional Content Page

Documents
Document Sharing Hub

Copyright Network Rail
Provided by IHS under license with Network Rail
No reproduction or networking permitted without license from IHS
Licensee=Weston Williamson/5989497001, User=sam, albett
Not for Resale, 03/27/2016 21:27:07 MDT

Full document details: NR NR-CIV-SD-1733 ISSUE B 2010

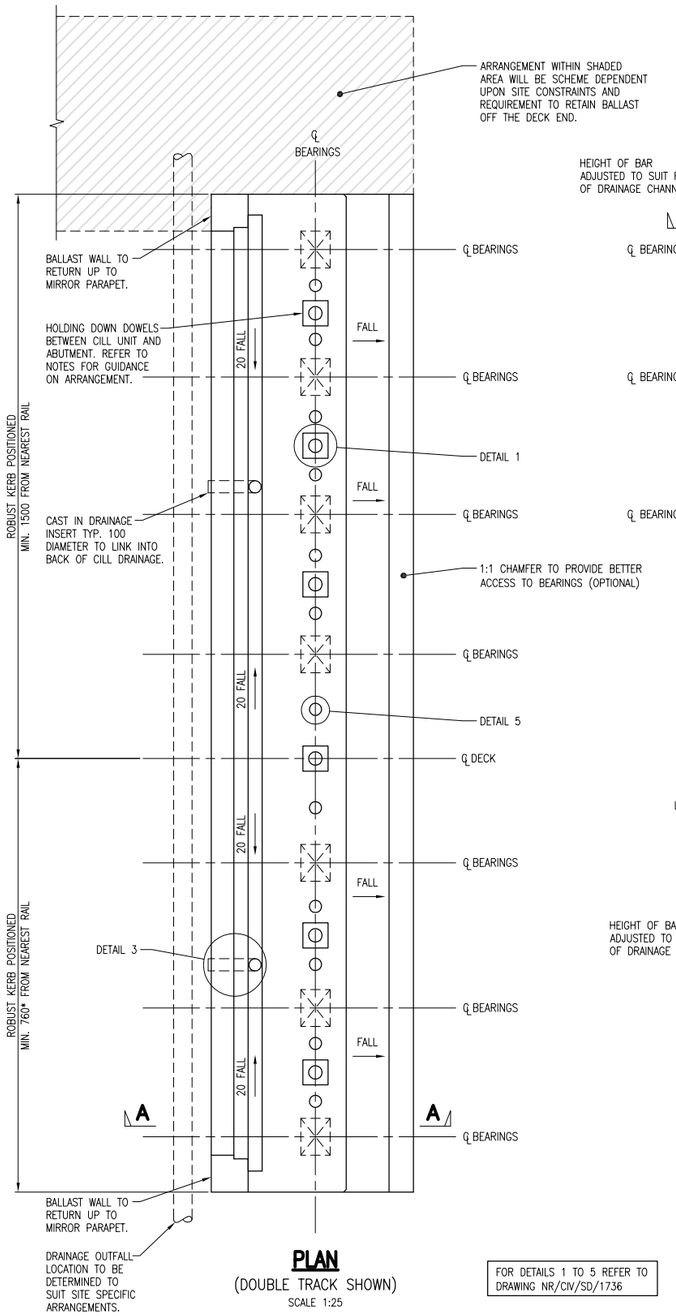

PLAN
(DOUBLE TRACK SHOWN)
SCALE 1:25

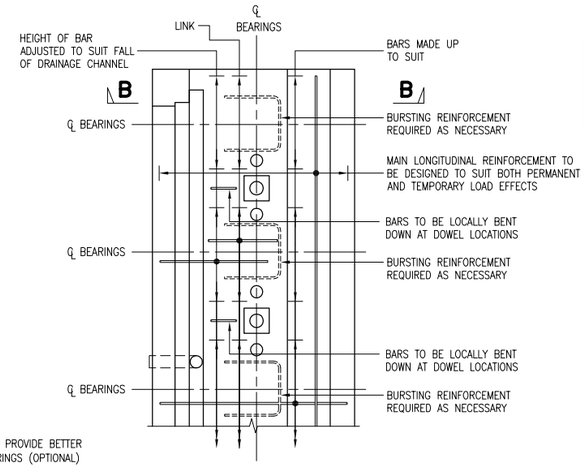

PART PLAN ON INDICATIVE REINFORCEMENT
SCALE 1:25

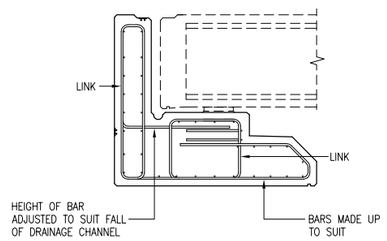

SECTION B–B
SCALE 1:25

FOR DETAILS 1 TO 5 REFER TO DRAWING NR/CIV/SD/1736

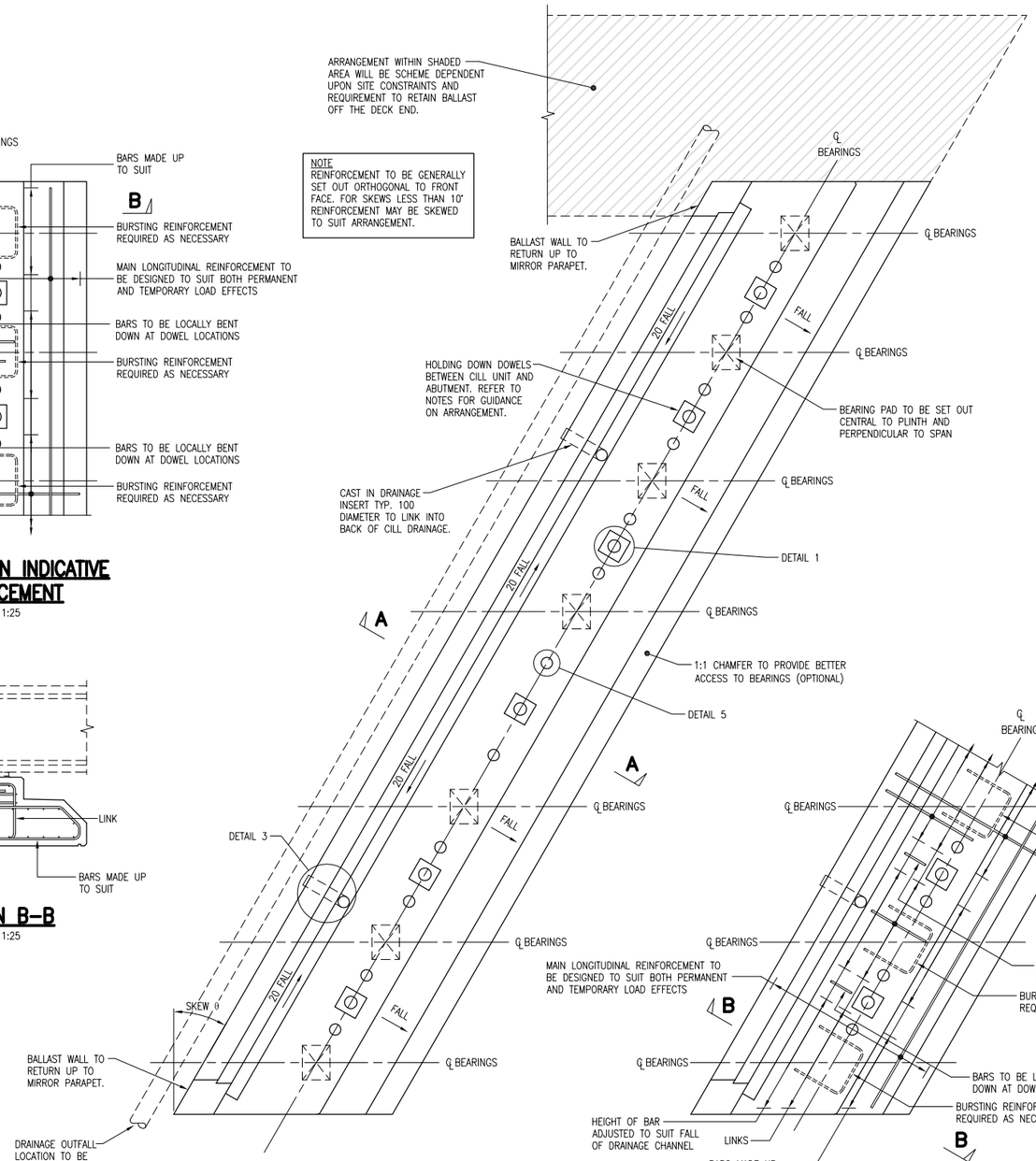

NOTE
REINFORCEMENT TO BE GENERALLY SET OUT ORTHOGONAL TO FRONT FACE. FOR SKEWS LESS THAN 10° REINFORCEMENT MAY BE SKEWED TO SUIT ARRANGEMENT.

PLAN
(30° SKEW DOUBLE TRACK SHOWN)
SCALE 1:25

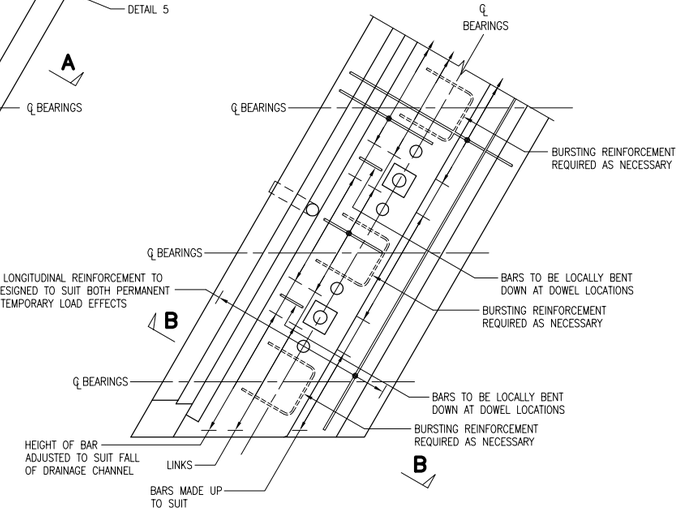

PART PLAN ON INDICATIVE REINFORCEMENT
SCALE 1:25

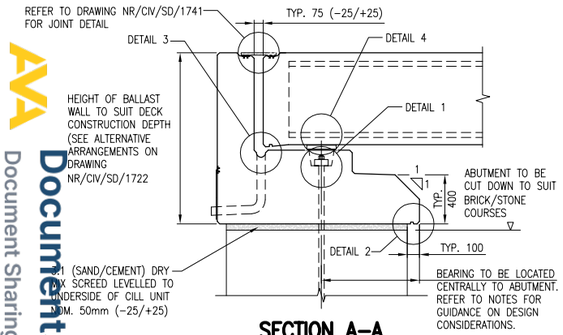

SECTION A–A
SCALE 1:25

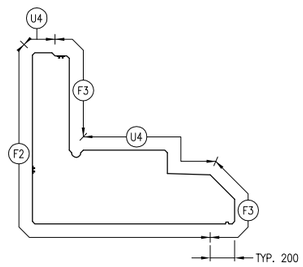

SECTION A–A
SCALE 1:25

GUIDANCE TO DESIGNERS

1. THE BRIDGE DECK, CILL UNIT AND EXISTING ABUTMENT ARE TO BE DESIGNED TO RESIST BOTH TRANSIENT LOAD EFFECTS (RAILWAY) AND ACCIDENTAL LOAD EFFECTS (BRIDGE STRIKE) IN ACCORDANCE WITH BSEN1991–1–7.
2. TO RESIST TRANSIENT LOAD EFFECTS THE DECK MUST BE ADEQUATELY RESTRAINED TO THE CILL UNIT AND THE CILL UNIT TO THE ABUTMENT BY SOME FORM OF CONNECTION THROUGH A SERIES OF DOWELS / HOLDING DOWN RESTRAINTS.
3. PROPRIETARY DOWEL AND DOWEL CAPS CAN BE USED TO RESTRAIN HORIZONTAL LOAD EFFECTS FROM AN IMPACT BUT ARE NOT SUITABLE TO RESTRAIN THE ASSOCIATED UPLIFT FORCE.
4. RESIDUAL UPLIFT FORCES (IMPACT FORCE LESS NOMINAL CONTRIBUTING MASS OF DECK AND SUPER DEAD LOAD EFFECTS) IS TO BE RESISTED BY AN UPLIFT RESTRAINT DEVICE.
5. THE NUMBER OF HOLDING DOWN CILL TO ABUTMENT RESTRAINTS AND THE DEPTH OF EMBEDMENT INDEPENDENT UPON THE RESIDUAL UPLIFT FORCE AND THE ABILITY OF THE ABUTMENT CONTRIBUTING MASS TO RESIST THE UPLIFT FORCES.

REFER TO TECHNICAL USER MANUAL FOR GUIDANCE.

DRAWING No. NR/CIV/SD/1733

NOTES

1. THIS DRAWING IS TO BE READ IN CONJUNCTION WITH THE GENERAL NOTES ON DRAWING NR/CIV/SD/1702.
2. ALL CONCRETE, MATERIALS & WORKMANSHIP TO BE IN ACCORDANCE WITH BSEN13670 AS AMMENDED BY THE NETWORK RAIL SPECIFICATION.
3. REINFORCED CONCRETE INFORMATION IN ACCORDANCE WITH BS8500–2:2006 TO BE PROVIDED BY THE DESIGNER:

   MIN CONCRETE GRADE
   REINFORCEMENT TYPE
   MAXIMUM AGGREGATE SIZE
   NOMINAL COVER TO REINFORCEMENT
   FIXING TOLERANCE
   CEMENT TYPE / COMBINATION
   MAXIMUM WATER / CEMENT RATIO
   MINIMUM COMBINATION CONTENT
4. EXPOSURE CLASS TO BE XD3.
5. ALL REINFORCEMENT TO BE TO GRADE B500B OR B500C CONFORMING TO BS4449:2005
6. ALL REINFORCEMENT TO BE CUT AND BENT TO BS8666:2005
7. BAR BENDING SCHEDULE IS TO BE PREPARED FOR EACH INDIVIDUAL BRIDGE. THERE ARE NO STANDARD SCHEDULES TO ACCOMPANY THE STANDARD DRAWINGS.
8. ALL CHAMFERS TO BE 20x20mm.
9. WATERPROOFING TO BE APPLIED IN ACCORDANCE WITH THE MANUFACTURER'S RECOMMENDATIONS WHEN CONCRETE HAS ATTAINED ITS SPECIFIED 7 DAY STRENGTH OR AFTER 7 DAYS, WHICHEVER IS THE LONGEST.
10. THIS DRAWING IS TO BE READ IN CONJUCTION WITH THE CILL BEAM AND BALLAST WALL DETAILS ON DRAWING NR/CIV/SD/1736.

Rev	Date	Description of revision	Design'd	C'kd
B	APR 10	EUROCODE ISSUE	MK	AGW
A	APR 10	FIRST ISSUE	MK	AGW
P2	18.06.09	DETAILS REVISED	MK	AGW
P1	27.03.09	DRAFT FOR REVIEW	MK	AGW

Network Rail Infrastructure Ltd
Registered Office:
Kings Place
90 York Way
London
N1 9AG

Approved	Name	Position	Signature	Date
	Paul Clark	Snr. Proj. Eng. Manager Infrastructure Investment Building and Civils	P.C.	APR 10

Master copy with original signatures held by Network Rail HQ CIVIL ENGINEERING STANDARD DESIGN

© COPYRIGHT NETWORK RAIL 2009

CONCRETE UNDERBRIDGE STANDARD DRAWINGS

CAST ON SITE FILLER BEAM DECK CILL UNIT GENERAL ARRANGEMENT

Scale	AS SHOWN	
Drawing Number	NR/CIV/SD/1733	B

Documents
Document Sharing Hub
Licensee=Weston Williamson/5989497001, User=sam, albett
Not for Resale, 03/27/2016 21:27:07 MDT
Copyright Network Rail
Provided by IHS under license with Network Rail
No reproduction or networking permitted without license from IHS