Supplementary Information

The following information is associated with Network Rail Standard:
NR CIV/SD/1736 Rev B

Additional Content Access

Click the link below to access CAD version of this drawing.

CAD Drawing

- CIV/SD/1736

If you have any questions, or need assistance, please contact **IHS Support**

Information accessed via the links above is the property of the Copyright holder

IHS Additional Content Page

Documents
Document Sharing Hub

Copyright Network Rail
Provided by IHS under license with Network Rail
No reproduction or networking permitted without license from IHS
Full document details: NR NR-CIV-SD-1736 ISSUE B 2010

Licensee=Weston Williamson/5989497001, User=sam, albett
Not for Resale, 03/27/2016 21:24:41 MDT

Full document details: NR NR-CIV-SD-1736 ISSUE B 2010

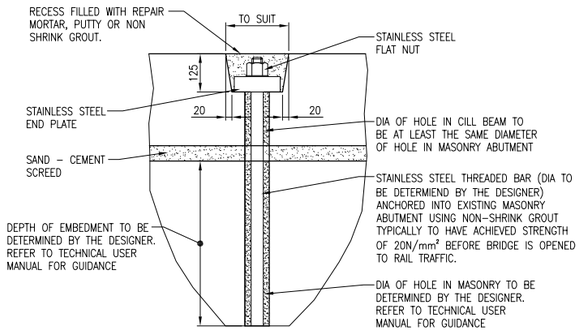

DETAIL 1
CILL HOLDING DOWN
SCALE 1:10

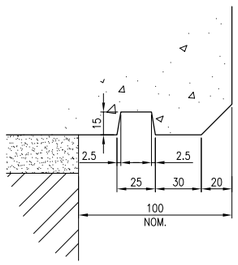

DETAIL 2
DRIP DETAIL
SCALE 1:2

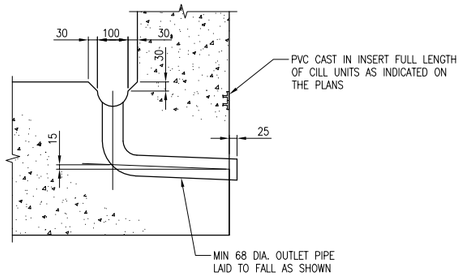

DETAIL 3
DRAINAGE OUTLET
SCALE 1:10

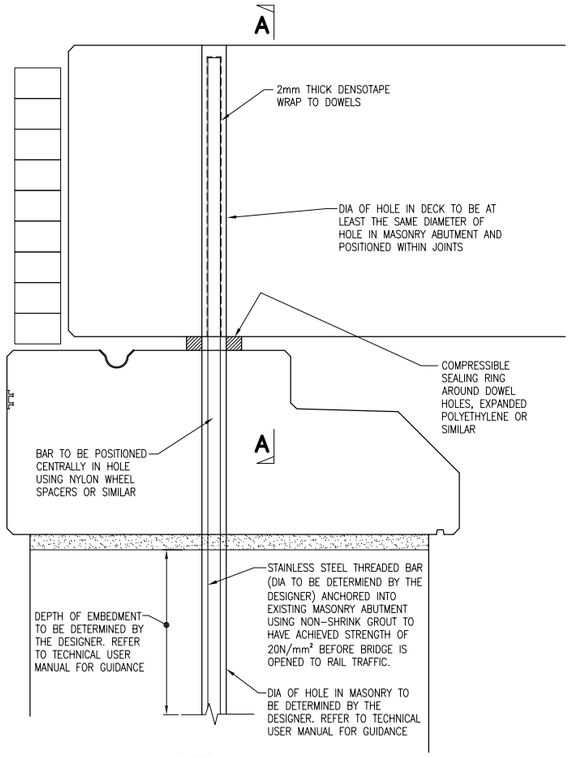

DETAIL 6
LATERAL RESTRAINT
SCALE 1:10

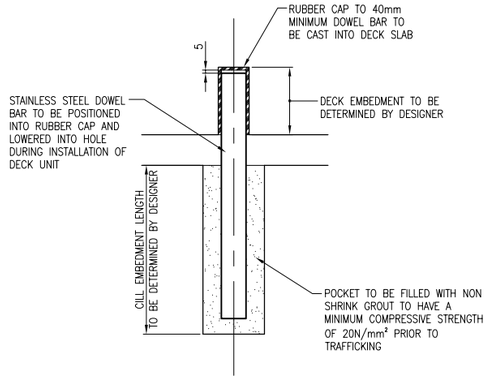

DETAIL 5
DOWEL BAR ARRANGEMENT
SCALE 1:5

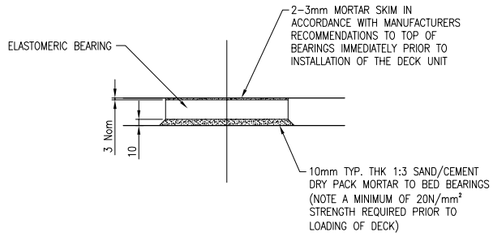

DETAIL 4
BEARING DETAIL
SCALE 1:5

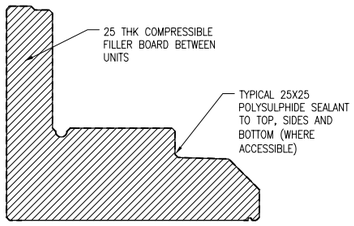

CILL JOINT DETAIL
SCALE 1:20

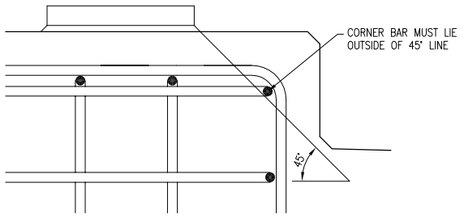

PLINTH REINFORCEMENT DETAIL
SCALE 1:5

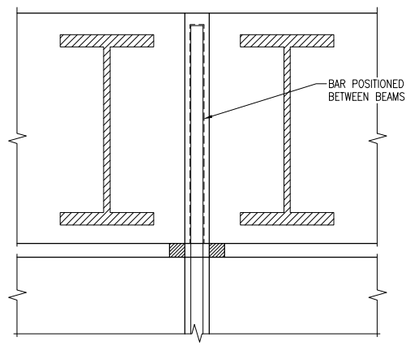

SECTION A–A
FOR FILLER BEAM DECK
(CONCRETE SLAB DECK SIMILAR)
SCALE 1:10

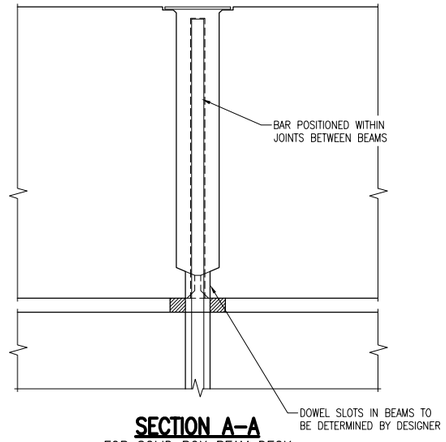

SECTION A–A
FOR SOLID BOX BEAM DECK
SCALE 1:10

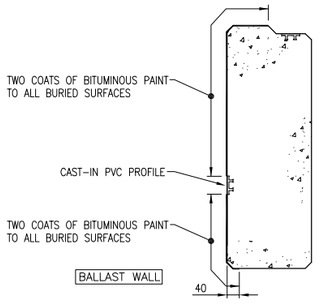

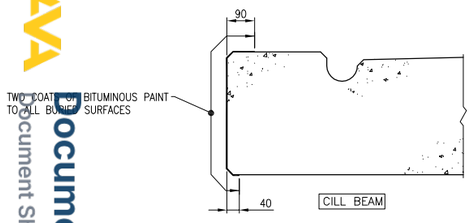

PART SECTION AT ABUTMENT
SHOP APPLIED WATERPROOFING
SCALE 1:10

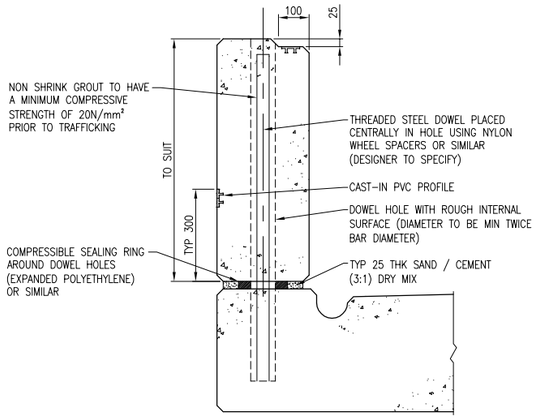

TYPICAL BALLAST WALL SECTION
SCALE 1:10

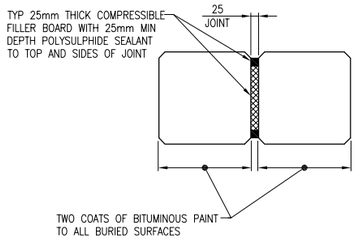

PLAN ON BALLAST WALL UPSTANDS
SHOP APPLIED WATERPROOFING
SCALE 1:10

DRAWING No. NR/CIV/SD/1736

NOTES

Rev	Date	Description of revision	Design'd	C'kd
B	APR 10	EUROCODE ISSUE	MK	AGW
A	APR 10	FIRST ISSUE	MK	AGW
P2	18.06.09	DETAILS REVISED	MK	AGW
P1	27.03.09	DRAFT FOR REVIEW	MK	AGW

Network Rail
Network Rail Infrastructure Ltd
Registered Office:
Kings Place
90 York Way
London
N1 9AG

Approved	Paul Clark	Snr. Proj. Eng. Manager Infrastructure Investment Building and Civils	P.C.	APR 10
	Name	Position	Signature	Date

Master copy with original signatures held by Network Rail HQ
CIVIL ENGINEERING STANDARD DESIGN

© COPYRIGHT NETWORK RAIL 2009

CONCRETE UNDERBRIDGE STANDARD DRAWINGS

CILL UNIT AND BALLAST WALL GENERAL DETAILS

Scale	AS SHOWN	
Drawing Number	NR/CIV/SD/1736	B

Documents
Document Sharing Hub
Licensee=Weston Williamson/5989497001, User=sam, albett
Not for Resale, 03/27/2016 21:24:41 MDT
Copyright Network Rail
Provided by IHS under license with Network Rail
No reproduction or networking permitted without license from IHS