Supplementary Information

The following information is associated with Network Rail Standard:
NR CIV/SD/1741 Rev B

Additional Content Access

Click the link below to access CAD version of this drawing.

CAD Drawing

- CIV/SD/1741

If you have any questions, or need assistance, please contact **IHS Support**

Information accessed via the links above is the property of the Copyright holder

IHS Additional Content Page

Documents
Document Sharing Hub

Copyright Network Rail
Provided by IHS under license with Network Rail
No reproduction or networking permitted without license from IHS
Full document details: NR NR-CIV-SD-1741 ISSUE B 2010

Licensee=Weston Williamson/5989497001, User=sam, albett
Not for Resale, 03/27/2016 21:26:00 MDT

Full document details: NR NR-CIV-SD-1741 ISSUE B 2010

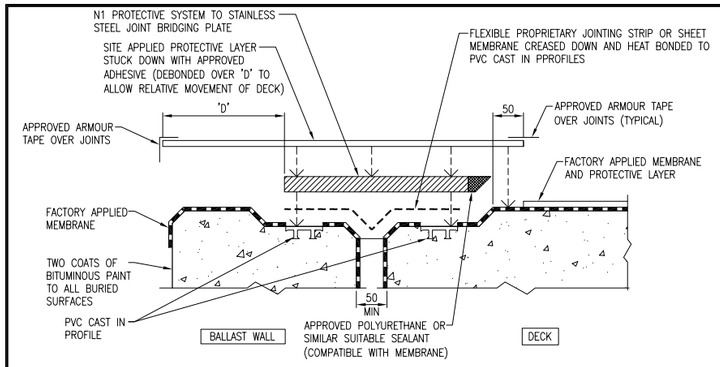

TYPICAL DECK END JOINT DETAIL

SITE APPLIED WATERPROOFING

SCALE 1:5

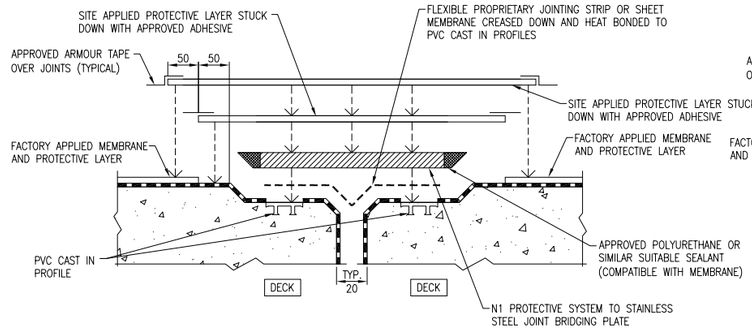

TYPICAL WATERPROOFING DETAIL OF DECK JOINTS WITH NO SHEAR CONNECTION

(SMALL MOVEMENTS BETWEEN DECK UNITS)

SITE APPLIED WATERPROOFING

SCALE 1:5

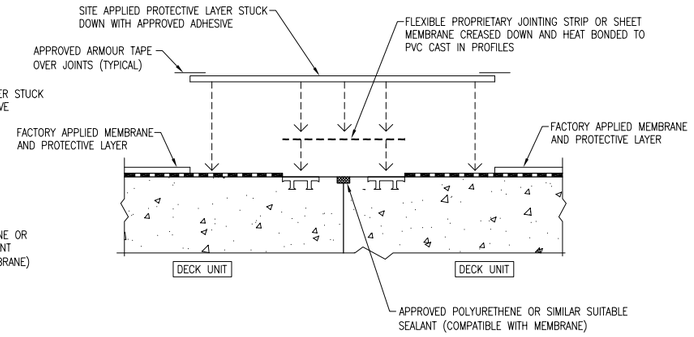

TYPICAL WATERPROOFING DETAIL OF DECK JOINTS WITH TRANSVERSE POST TENSIONING

SITE APPLIED WATERPROOFING

SCALE 1:5

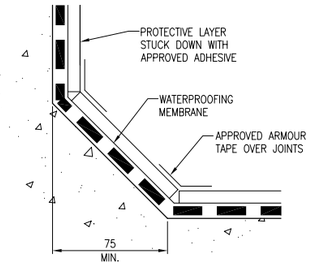

FORMED CONCRETE

SCALE 1:2

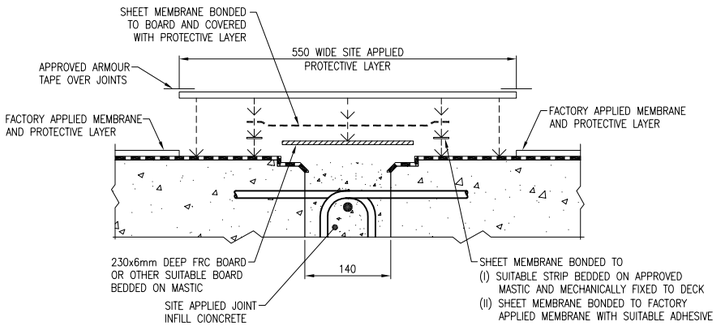

TYPICAL WATERPROOFING DETAIL OF SHEAR CONNECTED BEAMS

SITE APPLIED WATERPROOFING

SCALE 1:5

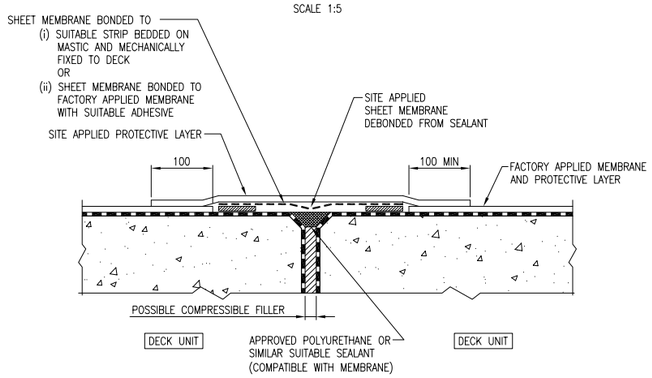

TYPICAL ALTERNATIVE WATERPROOFING DETAIL OF DECK JOINTS WITH NO SHEAR CONNECTION

(SMALL MOVEMENT BETWEEN DECK UNITS)

SITE APPLIED WATERPROOFING

SCALE 1:5

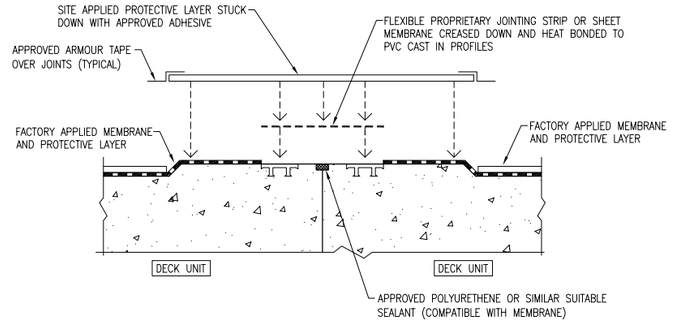

TYPICAL ALTERNATIVE WATERPROOFING DETAIL OF DECK JOINTS WITH TRANSVERSE POST TENSIONING

SITE APPLIED WATERPROOFING

SCALE 1:5

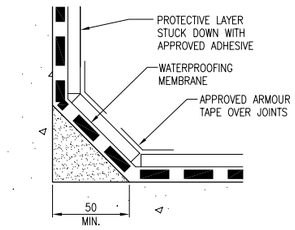

MORTAR FILLET

SCALE 1:2

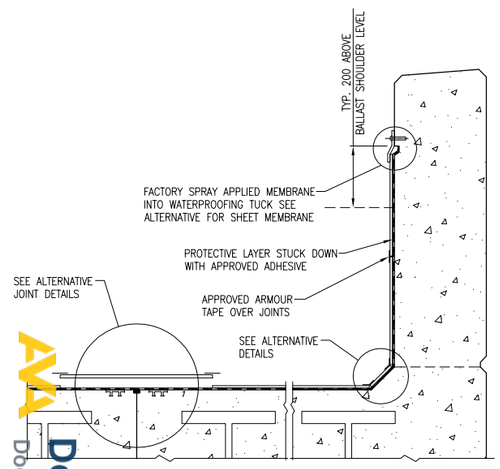

ROBUST KERB WATERPROOFING DETAIL

(FILLER BEAM DECK SHOWN)

SCALE 1:10

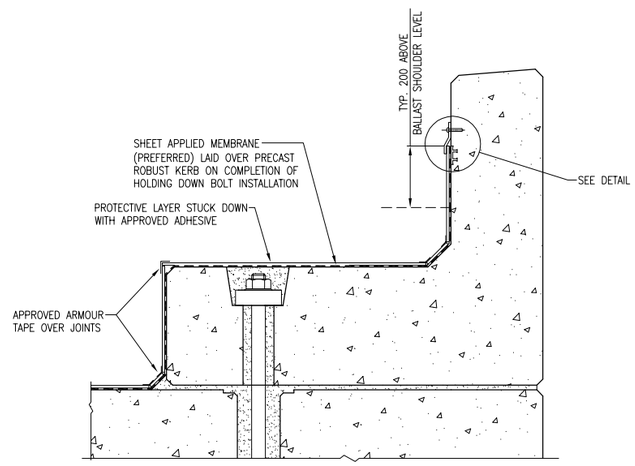

ALTERNATIVE ROBUST KERB WATERPROOFING DETAIL

(PRESTRESSED BEAM DECK SHOWN)

SCALE 1:10

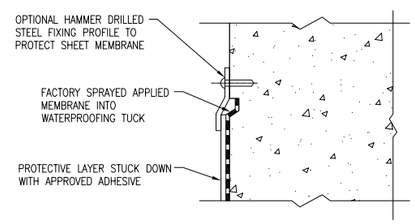

ROBUST KERB WATERPROOFING DETAIL

SITE APPLIED WATERPROOFING

SCALE 1:5

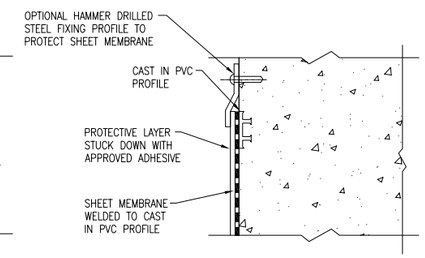

ROBUST KERB ALTERNATIVE WATERPROOFING DETAIL

SITE APPLIED WATERPROOFING

SCALE 1:5

KEY

- FACTORY APPLIED MEMBRANE
- PROTECTIVE LAYER
- SITE APPLIED MEMBRANE
- ADHESIVE
- POLYURETHANE SEALANT
- ARMOUR TAPE
- PVC INSERT
- BRIDGING PLATE

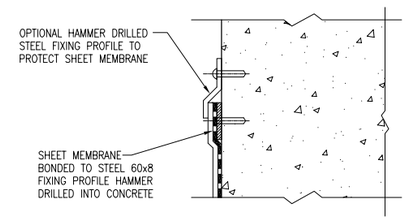

ROBUST KERB ALTERNATIVE WATERPROOFING DETAIL

SITE APPLIED WATERPROOFING

SCALE 1:5

DRAWING No. NR/CIV/SD/1741

NOTES

1. ALL MATERIALS AND WORKMANSHIP TO COMPLY WITH CURRENT NATIONAL STANDARDS, THE NETWORK RAIL SPECIFICATION AND GUIDANCE NR/GN/CIV/001. REFER ALSO TO NR/SD/CIV/041.
2. WHERE ANY MATERIALS OR PRODUCTS ARE DETAILED, THE CONTRACTOR MAY USE EQUIVALENT ALTERNATIVES, SUBJECT TO THE APPROVAL OF THE ENGINEER.
3. WHERE POSSIBLE, ALL PVC BONDING TO BE COMPLETED PRIOR TO DELIVERY TO SITE OR PRIOR TO INSTALLATION.
4. CONCRETE SURFACES NOT PROTECTED BY THE SPRAY APPLIED ACRYLIC WATERPROOFING MEMBRANE THAT MAY BE EXPOSED TO CHLORIDES TO BE SEALED WITH A HYDROPHOBIC PORE LINING IMPREGNANT. REFER TO HIGHWAYS AGENCY DOCUMENT BD43/03.

Rev	Date	Description of revision	Design'd	C'kd
B	APR 10	EUROCODE ISSUE	MK	AGW
A	APR 10	FIRST ISSUE	MK	AGW
P2	18.06.09	DETAILS REVISED	MK	AGW
P1	27.03.09	DRAFT FOR REVIEW	MK	AGW

Network Rail

Network Rail Infrastructure Ltd
Registered Office:
Kings Place
90 York Way
London
N1 9AG

	Name	Position	Signature	Date
Approved	Paul Clark	Snr. Proj. Eng. Manager Infrastructure Investment Building and Civils	P.C.	APR 10

Master copy with original signatures held by Network Rail HQ CIVIL ENGINEERING STANDARD DESIGN

© COPYRIGHT NETWORK RAIL 2009

CONCRETE UNDERBRIDGE STANDARD DRAWINGS

DECK END WATERPROOFING AND DRAINAGE DETAILS

2 of 2

Scale	AS SHOWN	
Drawing Number	NR/CIV/SD/1741	B

Documents
Document Sharing Hub

Licensee=Weston Williamson/5989497001, User=sam, albett
Not for Resale, 03/27/2016 21:26:00 MDT

Copyright Network Rail
Provided by IHS under license with Network Rail
No reproduction or networking permitted without license from IHS