Supplementary Information

The following information is associated with Network Rail Standard:
NR CIV/SD/1810 Rev B

Additional Content Access

Click the link below to access CAD version of this drawing.

CAD Drawing

- CIV/SD/1810

If you have any questions, or need assistance, please contact **IHS Support**

Information accessed via the links above is the property of the Copyright holder

IHS Additional Content Page

Documents
Document Sharing Hub

Copyright Network Rail
Provided by IHS under license with Network Rail
No reproduction or networking permitted without license from IHS
Full document details: NR NR-CIV-SD-1810 ISSUE B 2010

Licensee=Weston Williamson/5989497001, User=sam, albett
Not for Resale, 03/27/2016 21:29:38 MDT

Full document details: NR NR-CIV-SD-1810 ISSUE B 2010

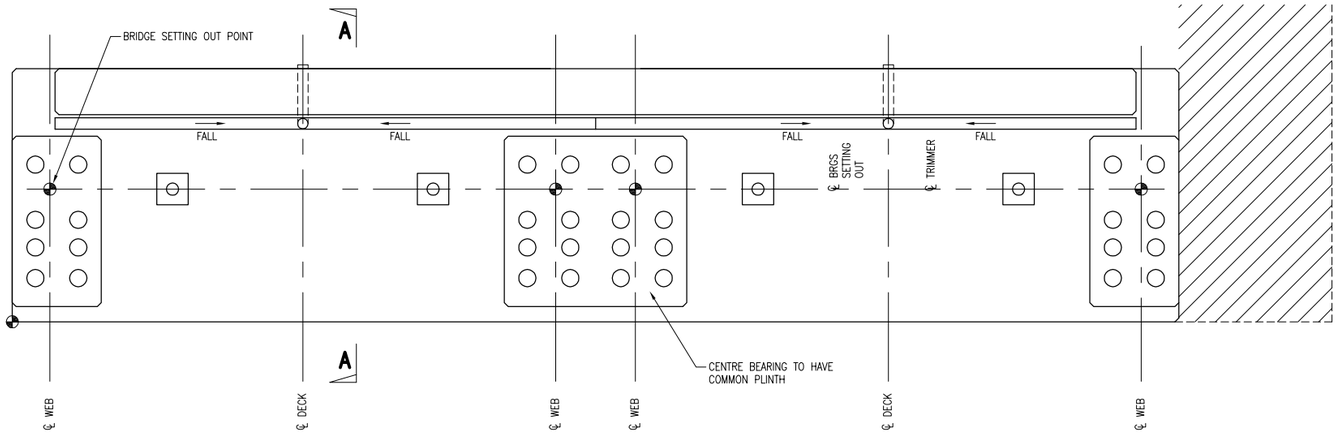

PLAN ON TYPE 1 ONE CILL UNIT

SCALE 1:20

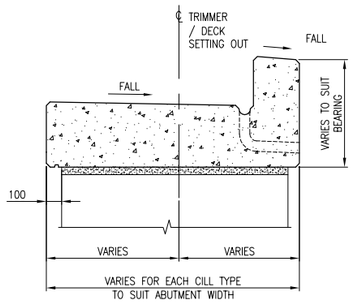

SECTION A–A

SCALE 1:20

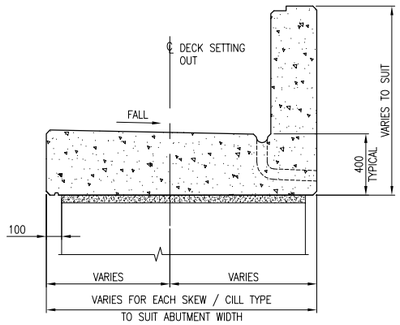

SECTION B–B

SCALE 1:20

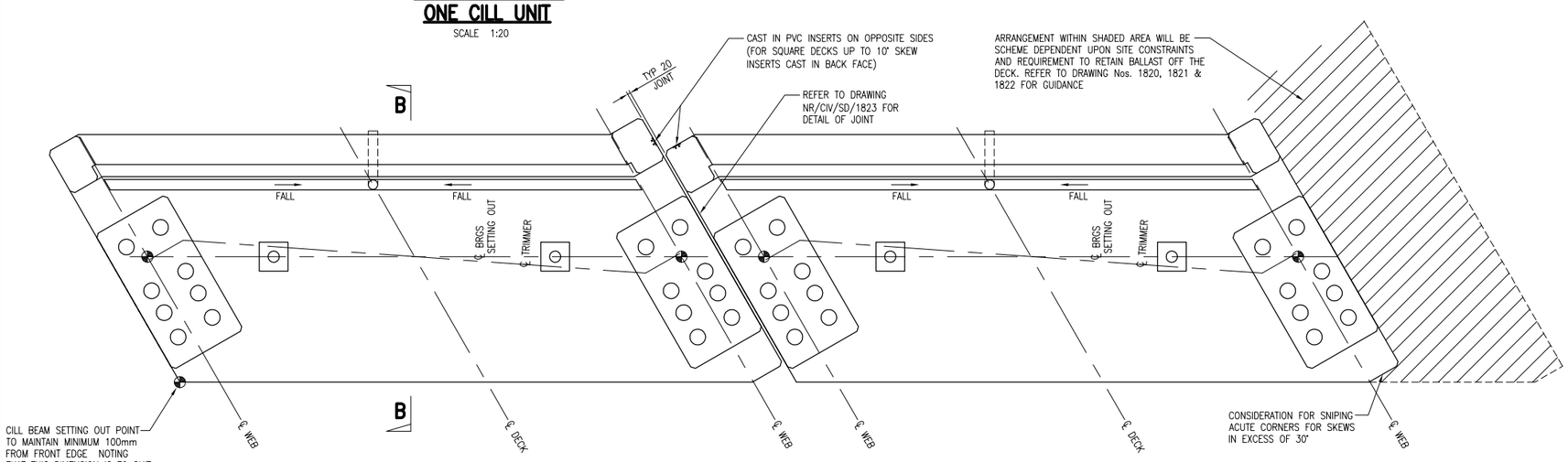

PLAN ON TYPE 2A TWO CILL UNIT (30° SKEW SHOWN)

SCALE 1:20

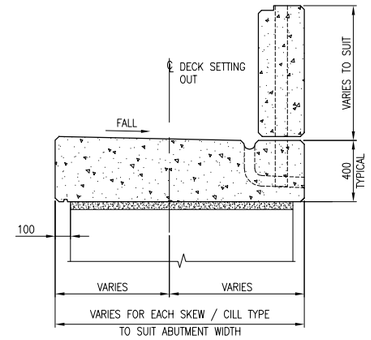

SECTION C–C

SCALE 1:20

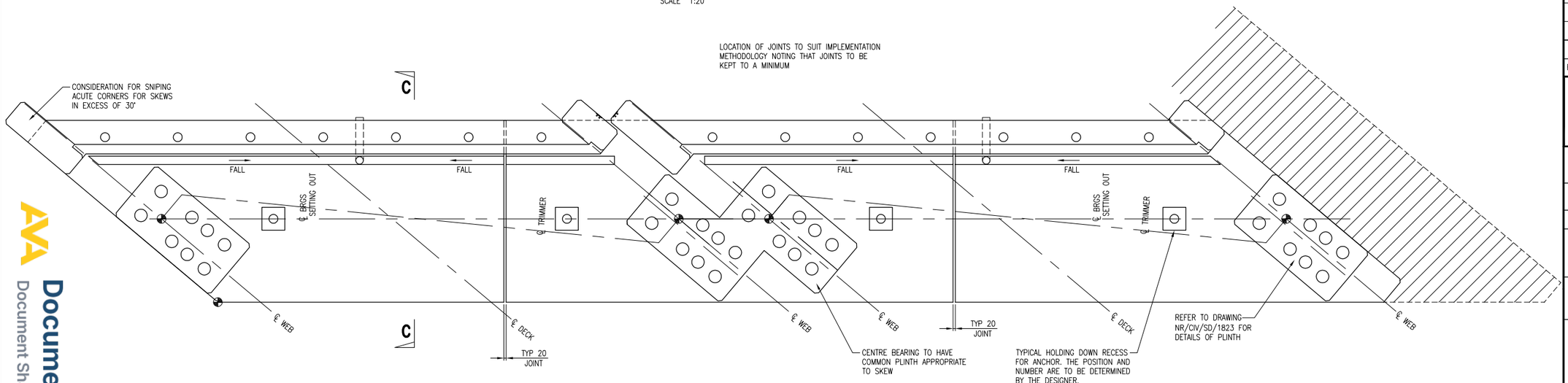

PLAN ON TYPE 2B THREE CILL UNIT (50° SKEW SHOWN)

SCALE 1:20

DRAWING No. NR/CIV/SD/1810

NOTES

1. CILL ARRANGEMENTS SHOWN ARE INDICATIVE AND FOR GUIDANCE ONLY TO SHOW THE VARIATIONS IN CILL TYPES AND UNIT ARRANGEMENTS NOTING THAT EACH CILL TYPE AND ARRANGEMENT ARE INTERCHANGEABLE. REFER TO TECHNICAL USER MANUAL FOR GUIDANCE ON SELECTION CRITERIA.
2. FRONT AND REAR SIDES OF CILL TO NORMALLY BE SET OUT PARALLEL TO BEARING CENTERLINE.
3. THE DEPTH OF CILL SHOWN IS TYPICAL AND CAN BE ALTERED AS NECESSARY TO SUIT SITE SPECIFIC SCHEME TAKING DUE ALLOWANCE OF BOTH TEMPORARY AND PERMANENT LOAD EFFECTS.
4. THE WIDTH OF CILL UNIT WILL BE A FUNCTION OF THE CILL TYPE, ABUTMENT WIDTH AND SKEW OF BRIDGE.
5. CILL ARRANGEMENTS SHOWN COVER WIDTH BETWEEN OUTER GIRDERS OF BRIDGE DECK(S) ONLY. FOR GUIDANCE ON BALLAST RETENTION OUTSIDE OF BRIDGE DECK REFER TO DRAWINGS NR/CIV/SD/1820, 1821 & 1822.
6. UNLESS SHOWN OTHERWISE REFER TO DRAWING NR/CIV/SD/1823 FOR DETAILS OF ALL UNITS AND BALLAST WALLS.

Rev	Date	Description of revision	Design'd	C'kd
B	APR 10	EUROCODE ISSUE	MK	AGW
A	APR 10	FIRST ISSUE	MK	AGW
P1	29.07.09	DRAFT FORM B ISSUE	MK	AGW

Network Rail Infrastructure Ltd
Registered Office:
Kings Place
90 York Way
London
N1 9AG

	Name	Position	Signature	Date
Approved	Paul Clark	Snr. Proj. Eng. Manager Infrastructure Investment Building and Civils	P.C.	APR 10

Master copy with original signatures held by Network Rail HQ CIVIL ENGINEERING STANDARD DESIGN

© COPYRIGHT NETWORK RAIL 2009

UNDERBRIDGE ANCILLARY ITEM DRAWINGS

KEY TO TYPES CILL UNITS

Scale	AS SHOWN	
Drawing Number	NR/CIV/SD/1810	B

Documents
Document Sharing Hub
Licensee=Weston Williamson/5989497001, User=sam, albett
Not for Resale, 03/27/2016 21:29:38 MDT
Copyright Network Rail
Provided by IHS under license with Network Rail
No reproduction or networking permitted without license from IHS