Supplementary Information

The following information is associated with Network Rail Standard:
NR CIV/SD/1813 Rev B

Additional Content Access

Click the link below to access CAD version of this drawing.

CAD Drawing

- CIV/SD/1813

If you have any questions, or need assistance, please contact **IHS Support**

Information accessed via the links above is the property of the Copyright holder

IHS Additional Content Page

--`,,,,,,`,,,,,,`,,`,,,,,,,,``-`-`,,`,,`,`,,`---

Documents
Document Sharing Hub

Copyright Network Rail
Provided by IHS under license with Network Rail
No reproduction or networking permitted without license from IHS
Full document details: NR NR-CIV-SD-1813 ISSUE B 2010

Licensee=Weston Williamson/5989497001, User=sam, albett
Not for Resale, 03/27/2016 21:27:19 MDT

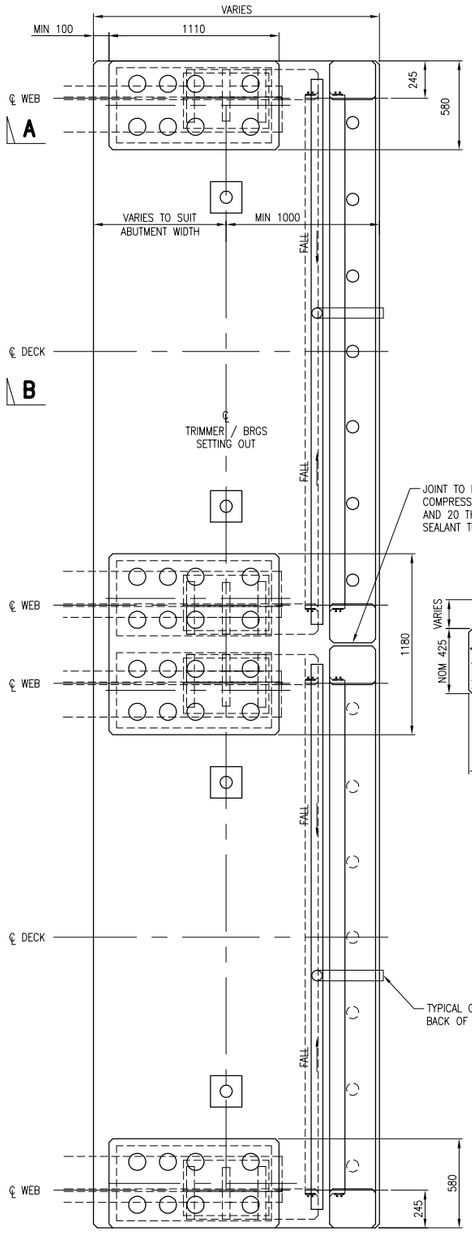

PLAN ON CILL UNIT TYPE 2B 'Z' TYPE SHOWN

SCALE 1:50

SECTION A–A 'U' OR 'Z' DECK APPLICABLE

SCALE 1:20

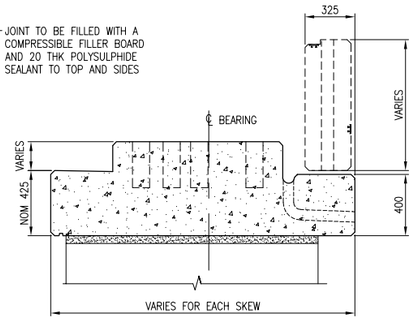

SECTION C–C 'U' OR 'Z' DECK APPLICABLE

SCALE 1:20

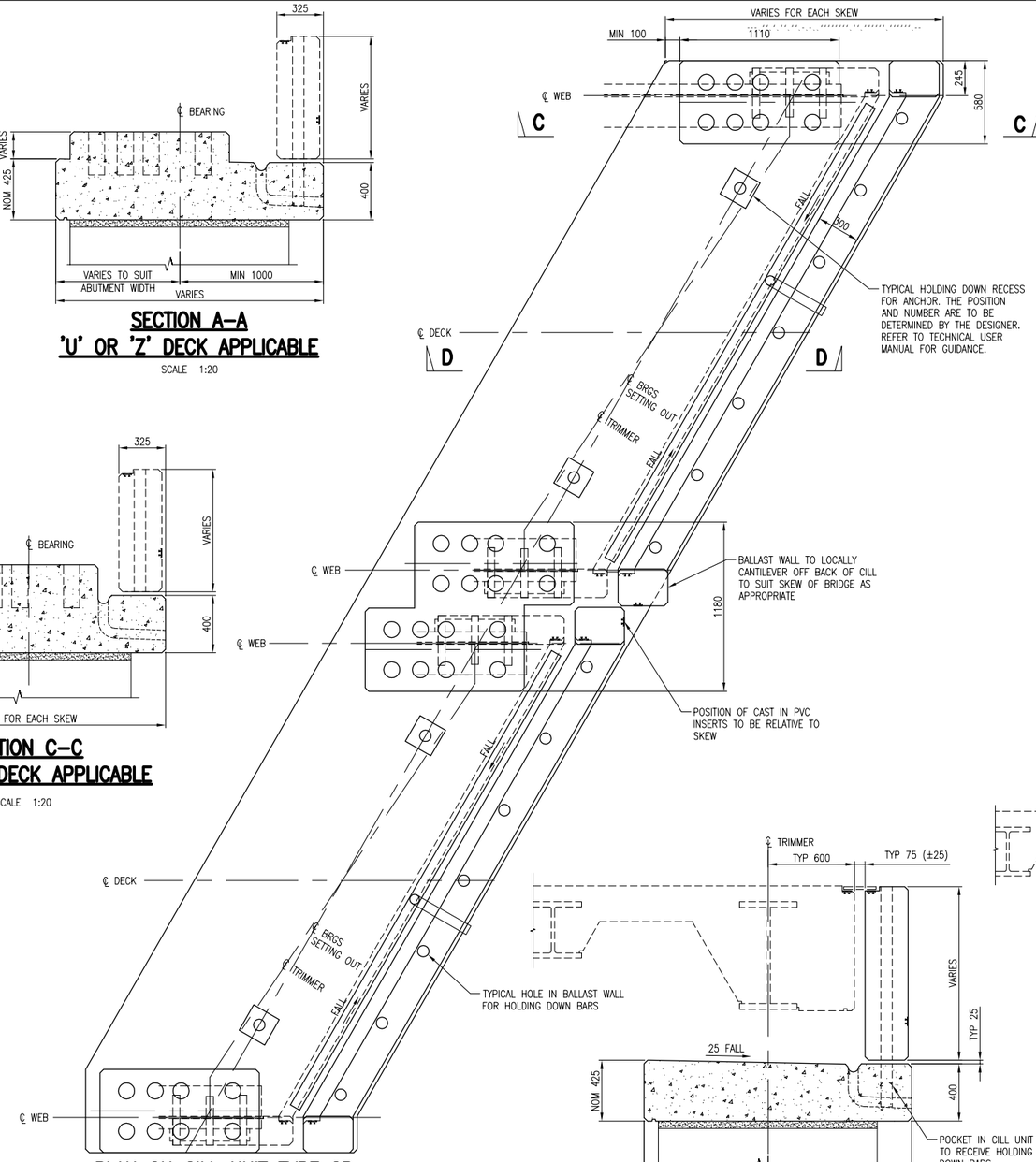

PLAN ON CILL UNIT TYPE 2B DRAWN AT 30° SKEW

SCALE 1:20

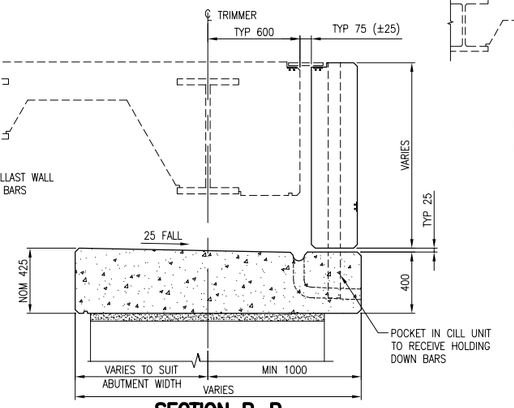

SECTION B–B 'E' TYPE DECK SHOWN

SCALE 1:20

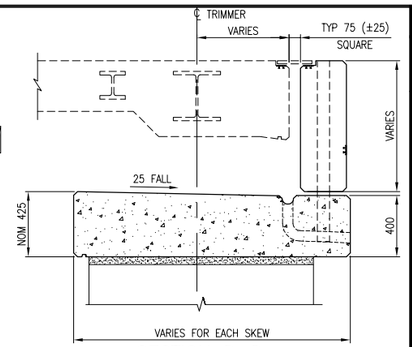

SECTION D–D 'Z' TYPE DECK SHOWN

SCALE 1:20

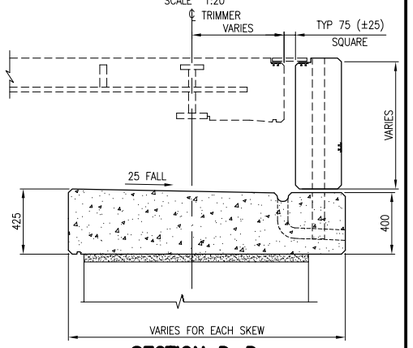

SECTION D–D 'U' TYPE DECK SHOWN

SCALE 1:20

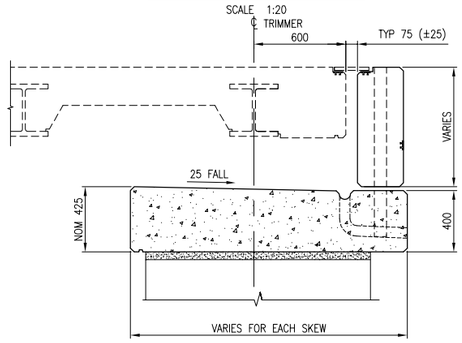

SECTION D–D 'D' TYPE DECK SHOWN

SCALE 1:20

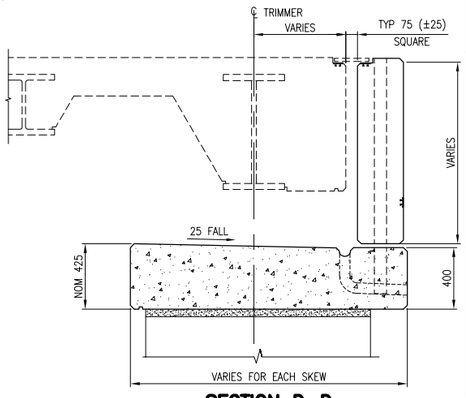

SECTION D–D 'E' TYPE DECK SHOWN

SCALE 1:20

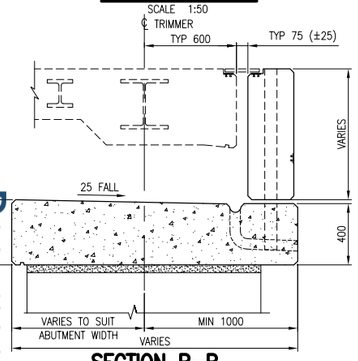

SECTION B–B 'Z' TYPE DECK SHOWN

SCALE 1:20

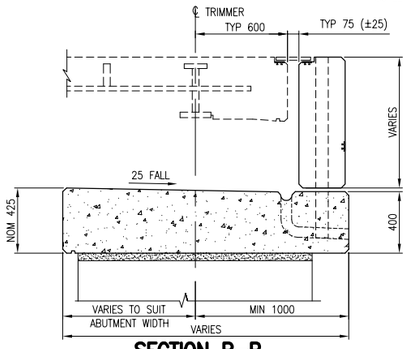

SECTION B–B 'U' TYPE DECK SHOWN

SCALE 1:20

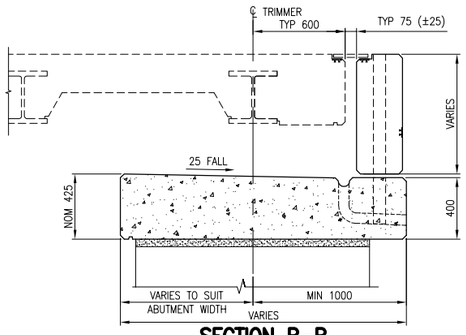

SECTION B–B 'D' TYPE DECK SHOWN

SCALE 1:20

DRAWING No. NR/CIV/SD/1813

NOTES

1. THIS DRAWING IS TO BE READ IN CONJUNCTION WITH THE GENERAL NOTES ON DRAWING NR/CIV/SD/1702.
2. CILL UNIT TYPE 2B CAN BE USED WHERE SMALL OR LARGE DECK MOVEMENTS ARE ANTICIPATED. DETAILS SHOWN ARE FOR STANDARD 'U', 'Z', 'D' & 'E' DECK TYPES. REFER TO TECHNICAL USER MANUAL FOR GUIDANCE.
3. ALL CONCRETE, MATERIALS & WORKMANSHIP TO BE IN ACCORDANCE WITH BSEN13670 AS AMMENDED BY THE NETWORK RAIL SPECIFICATION.
4. REINFORCED CONCRETE INFORMATION IN ACCORDANCE WITH BS8500–2:2006 TO BE PROVIDED BY THE SCHEME DESIGNER:

   MIN CONCRETE GRADE
   REINFORCEMENT TYPE
   MAXIMUM AGGREGATE SIZE
   NOMINAL COVER TO REINFORCEMENT
   FIXING TOLERANCE
   CEMENT TYPE / COMBINATION
   MAXIMUM WATER / CEMENT RATIO
   MINIMUM COMBINATION CONTENT
5. EXPOSURE CLASS TO BE XD3 (SOFFIT) AND XC4 (BELOW WATERPROOFING).
6. ALL REINFORCEMENT TO BE TO GRADE B500B OR B500C CONFORMING TO BS4449:2005.
7. ALL REINFORCEMENT TO BE CUT AND BENT TO BS8666:2005.
8. BAR BENDING SCHEDULE IS TO BE PREPARED FOR EACH INDIVIDUAL BRIDGE. THERE ARE NO STANDARD SCHEDULES TO ACCOMPANY THE STANDARD DRAWINGS.
9. ALL CHAMFERS TO BE 20x20mm.

Rev	Date	Description of revision	Design'd	C'kd
B	APR 10	EUROCODE ISSUE	MK	AGW
A	APR 10	FIRST ISSUE	MK	AGW
P2	29.07.09	DRAFT FORM B ISSUE	MK	AGW
P1	27.03.09	DRAFT FOR REVIEW	MK	AGW

Network Rail

Network Rail Infrastructure Ltd
Registered Office:
Kings Place
90 York Way
London
N1 9AG

	Name	Position	Signature	Date
Approved	Paul Clark	Snr. Proj. Eng. Manager Infrastructure Investment Building and Civils	P.C.	APR 10

Master copy with original signatures held by Network Rail HQ CIVIL ENGINEERING STANDARD DESIGN

© COPYRIGHT NETWORK RAIL 2009

UNDERBRIDGE ANCILLARY ITEM DRAWINGS

TWO TRACK CILL UNIT (TYPE 2B) GENERAL ARRANGEMENT

Scale	AS SHOWN
Drawing Number	NR/CIV/SD/1813 B

Full document details: NR NR-CIV-SD-1813 ISSUE B 2010
Documents
Document Sharing Hub
Licensee=Weston Williamson/5989497001, User=sam, albett
Not for Resale, 03/27/2016 21:27:19 MDT
Copyright Network Rail
Provided by IHS under license with Network Rail
No reproduction or networking permitted without license from IHS