Supplementary Information

The following information is associated with Network Rail Standard:
NR CIV/SD/1823 Rev B

Additional Content Access

Click the link below to access CAD version of this drawing.

CAD Drawing

- CIV/SD/1823

If you have any questions, or need assistance, please contact **IHS Support**

Information accessed via the links above is the property of the Copyright holder

IHS Additional Content Page

--`,,,,,,`,,,,,,`,,`,,,,,,,,`-`-`--`,,`,,`,`,,`---

Documents
Document Sharing Hub

Copyright Network Rail
Provided by IHS under license with Network Rail
No reproduction or networking permitted without license from IHS

Licensee=Weston Williamson/5989497001, User=sam, albett
Not for Resale, 03/27/2016 21:30:41 MDT

Full document details: NR NR-CIV-SD-1823 ISSUE B 2010

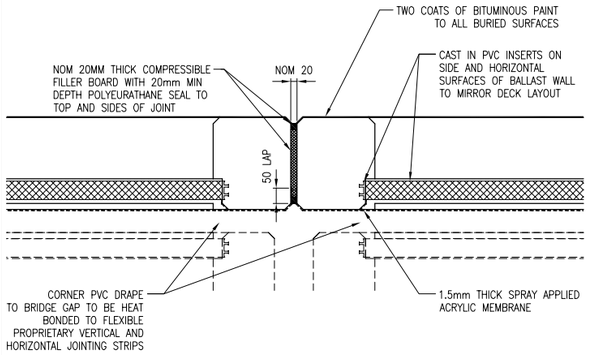

BALLAST WALL JOINT DETAIL (SQUARE SHOWN)

SCALE 1:10

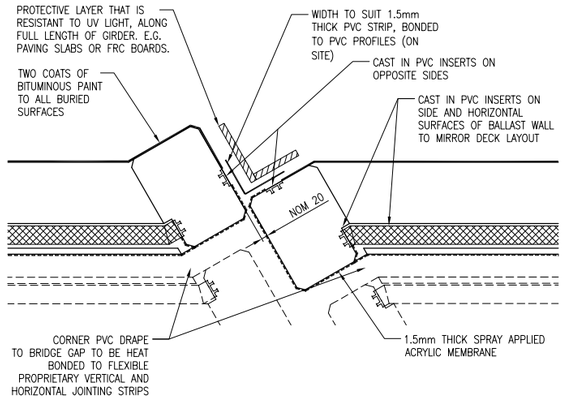

BALLAST WALL JOINT DETAIL (30° SKEW SHOWN)

SCALE 1:10

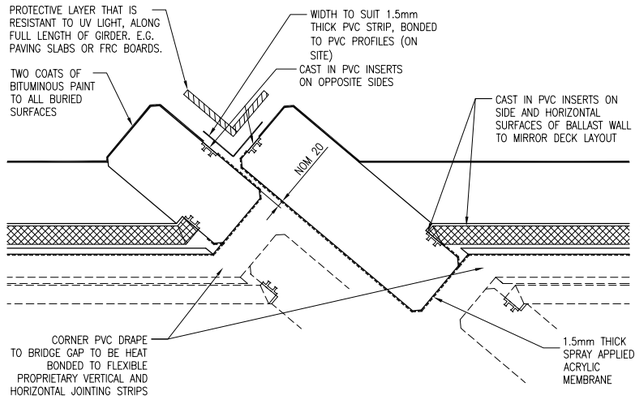

BALLAST WALL JOINT DETAIL (50° SKEW SHOWN)

SCALE 1:10

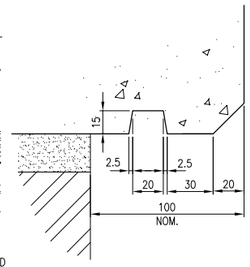

DETAIL 1

SCALE 1:2

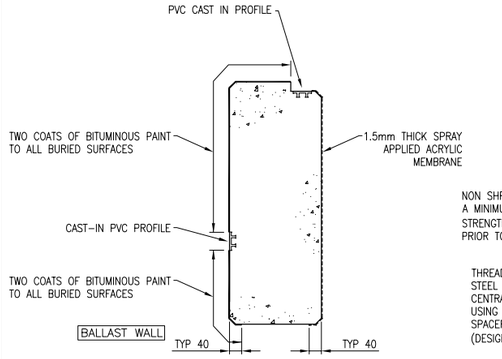

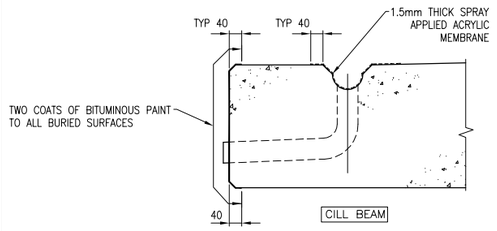

PART SECTION AT ABUTMENT

SHOP APPLIED WATERPROOFING
SCALE 1:10

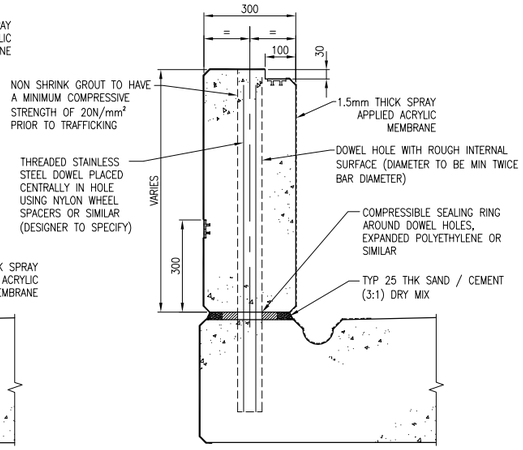

TYPICAL BALLAST WALL SECTION

SCALE 1:10

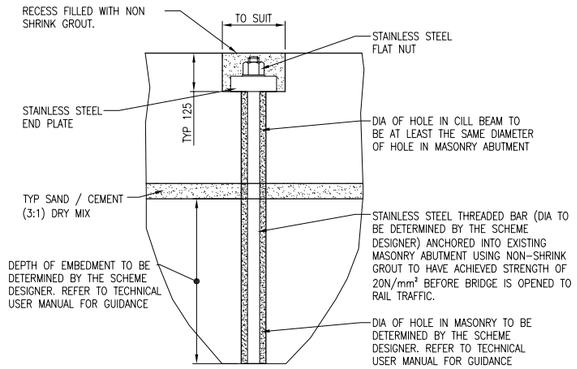

DETAIL 2 CILL HOLDING DOWN

SCALE 1:10

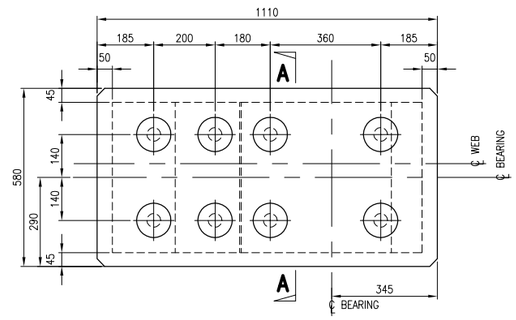

PLAN ON PLINTH DECK TYPES 'Z' AND 'U'

SCALE 1:10

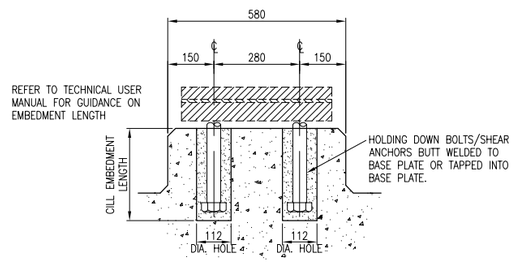

SECTION A–A

SCALE 1:10

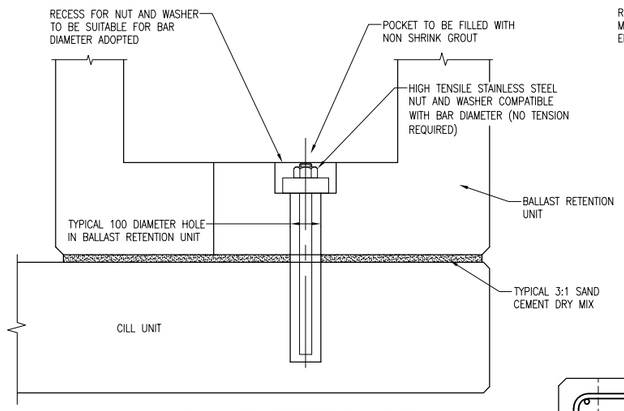

BALLAST RETENTION UNIT HOLDING DOWN

SCALE 1:10

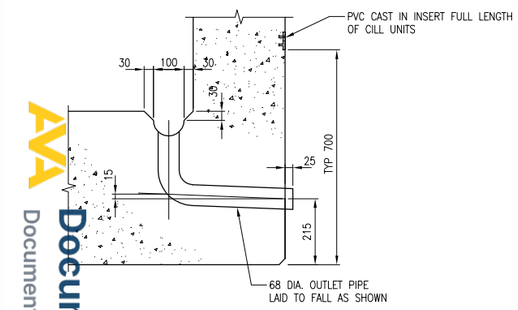

DRAINAGE OUTLET DETAIL

SCALE 1:10

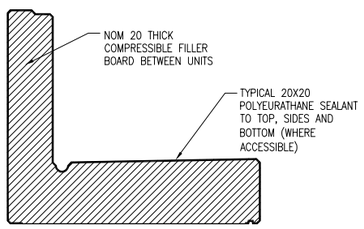

CILL JOINT DETAIL

SCALE 1:20

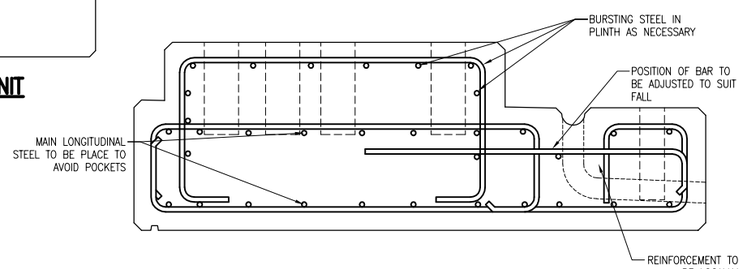

INDICATIVE CILL BEAM REINFORCEMENT

SCALE 1:10

DRAWING No. NR/CIV/SD/1823

NOTES

1. THE STANDARD DRAWING SERIES (NR/CIV/SD/1800) DETAILS THE WATERPROOFING DETAILS FOR THE BALLAST WALL INTERFACE AND ITS INTERFACE WITH STANDARD DECK ENDS ONLY. DETAILS OF STANDARD DECKS AND WATERPROOFING CAN BE FOUND ON THE STANDARD UNDERBRIDGE DRAWING SERIES.
2. ALL MATERIALS AND WORKMANSHIP TO COMPLY WITH THE NETWORK RAIL SPECIFICATION AND GUIDANCE NR/GN/CIV/001. REFER ALSO TO NR/SD/CIV/041.
3. FINISHES TO CONCRETE SURFACES INDICATED THUS: U3/F3 REFER TO THE NETWORK RAIL CONTRACT SPECIFICATION.
   SPECIAL FINISHES INDICATED THUS: U2S/F2S SHALL BE AS U2/F2 FINISH BUT THE SURFACE SHALL NOT DEVIATE FROM THE REQUIRED PROFILE BY MORE THAN 10mm WHEN TESTED WITH A 3m STRAIGHT EDGE OR CONTAIN ABRUPT IRREGULARITIES OF MORE THAN 3mm & SHALL BE SHOT BLASTED TO REMOVE LAITENCE. ADJACENT STEELWORK & WATERBAR TO BE PROTECTED DURING THE SHOT BLASTING PROCESS.
   ALL FORMWORK JOINTS & JOINTS BETWEEN STEELWORK & FORMWORK ARE TO BE SEALED WITH AN APPROVED SILICONE MASTIC BEFORE THE CONCRETE IS POURED.
4. WHERE ANY MATERIALS OR PRODUCTS ARE DETAILED, THE CONTRACTOR MAY USE EQUIVALENT ALTERNATIVES, SUBJECT TO THE APPROVAL OF THE ENGINEER.
5. WHERE POSSIBLE ALL SEALANT RUNS BETWEEN THE STEEL AND CONCRETE INTERFACES TO BE COMPLETED BEFORE INSTALLATION OF THE DECK.
6. WHERE POSSIBLE, ALL PVC BONDING TO BE COMPLETED PRIOR TO DELIVERY TO SITE OR PRIOR TO INSTALLATION.
7. CONCRETE SURFACES NOT PROTECTED BY THE SPRAY APPLIED ACRYLIC WATERPROOFING MEMBRANE THAT MAY BE EXPOSED TO CHLORIDES TO BE SEALED WITH A HYDROPHOBIC PORE LINING IMPREGNANT. REFER TO HIGHWAYS AGENCY DOCUMENT BD43/03.

Rev	Date	Description of revision	Design'd	C'kd
B	APR 10	EUROCODE ISSUE	MK	AGW
A	APR 10	FIRST ISSUE	MK	AGW
P1	29.07.09	DRAFT FORM B ISSUE	MK	AGW

Network Rail Infrastructure Ltd
Registered Office:
Kings Place
90 York Way
London
N1 9AG

Approved	Paul Clark	Snr. Proj. Eng. Manager Infrastructure Investment Building and Civils	P.C.	APR 10
	Name	Position	Signature	Date

Master copy with original signatures held by Network Rail HQ
CIVIL ENGINEERING STANDARD DESIGN
© COPYRIGHT NETWORK RAIL 2009

UNDERBRIDGE ANCILLARY ITEM DRAWINGS

CILL UNIT AND BALLAST WALL GENERAL DETAILS

Scale	AS SHOWN	
Drawing Number	NR/CIV/SD/1823	B

Full document details: NR NR-CIV-SD-1823 ISSUE B 2010
Licensee=Weston Williamson/5989497001, User=sam. albett
Not for Resale, 03/27/2016 21:30:41 MDT
Copyright Network Rail
Provided by IHS under license with Network Rail
No reproduction or networking permitted without license from IHS
AVA Documents
Document Sharing Hub