Supplementary Information

The following information is associated with Network Rail Standard:
NR CIV/SD/1840 Rev B

Additional Content Access

Click the link below to access CAD version of this drawing.

CAD Drawing

- CIV/SD/1840

If you have any questions, or need assistance, please contact **IHS Support**

Information accessed via the links above is the property of the Copyright holder

IHS Additional Content Page

--`,,,,,,`,,,,,,`,`,,`,,,,,,,,`-`-`-`,,`,,`,`,,`---

Documents
Document Sharing Hub

Copyright Network Rail
Provided by IHS under license with Network Rail
No reproduction or networking permitted without license from IHS
Full document details: NR NR-CIV-SD-1840 ISSUE B 2010

Licensee=Weston Williamson/5989497001, User=sam, albett
Not for Resale, 03/27/2016 21:30:52 MDT

Full document details: NR NR-CIV-SD-1840 ISSUE B 2010

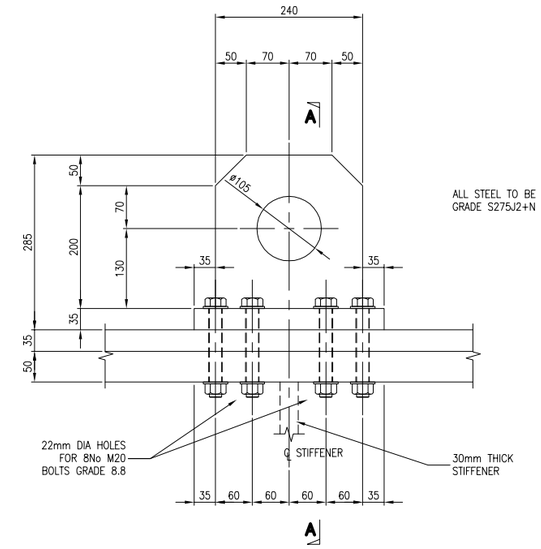

LIFTING BRACKET TYPE 1 – S.W.L. 25 T

SCALE 1:5

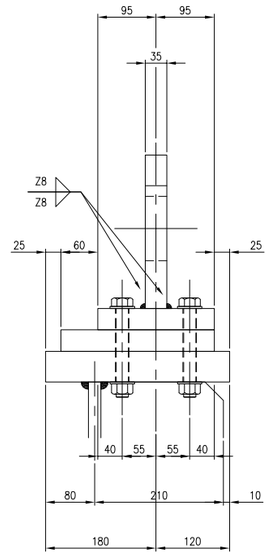

SECTION A–A – S.W.L. 25 T

SCALE 1:5

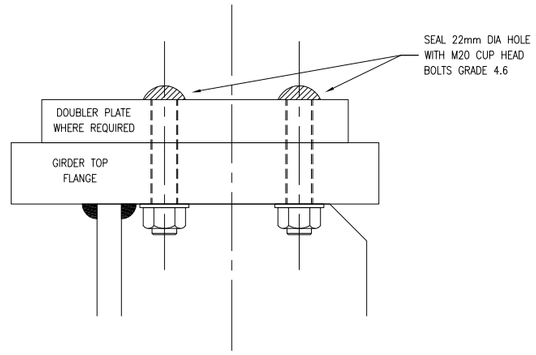

SEALING OF LIFTING BRACKET HOLES AFTER USE

DETAIL 1 – S.W.L. 25 T

SCALE 1:2.5

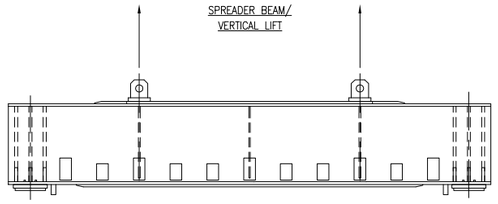

LIFTING BRACKETS TYPES 1 AND 2

SCALE 1:50

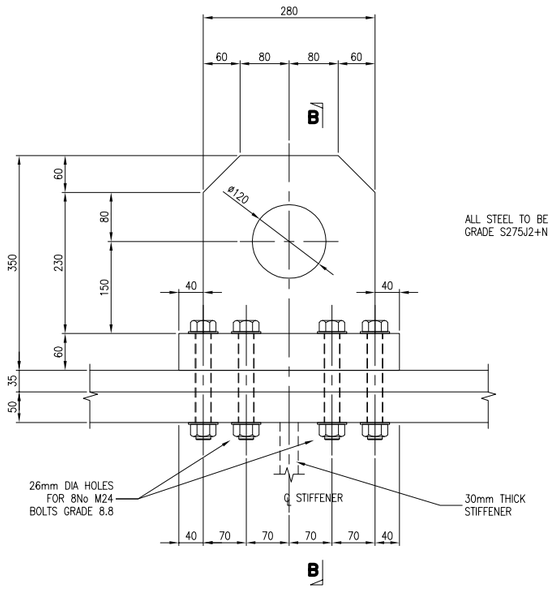

LIFTING BRACKET TYPE 2 – S.W.L. 50 T

SCALE 1:5

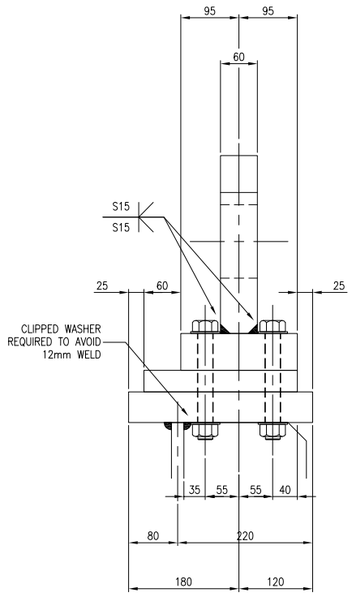

SECTION B–B – S.W.L. 50 T

SCALE 1:5

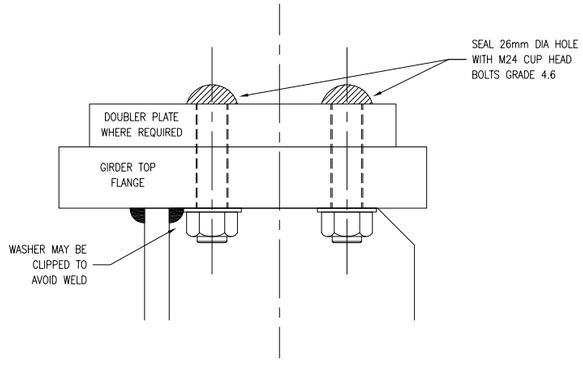

SEALING OF LIFTING BRACKET HOLES AFTER USE

DETAIL 1 – S.W.L. 50 T

SCALE 1:2.5

DRAWING No. NR/CIV/SD/1840

NOTES

1. FOR GENERAL NOTES REFER TO DRAWING No. NR/CIV/SD/1801.
2. FOR MAIN GIRDER DETAILS, REFER TO RELEVANT MAIN GIRDER DETAIL DRAWINGS.
3. ALL DIMENSIONS SHOWN ON THIS DRAWING ARE IN MILLIMETRES UNLESS NOTED OTHERWISE.
4. LIFTING BRACKETS TO BE LOCATED OVER 30mm THICK INTERMEDIATE STIFFENERS OR LIFTING STIFFENERS.
5. ALL PLATES TO BE STEEL GRADE S275J2+N TO B.S. EN10025 PART 2.
6. AFTER USE THE HOLES ARE TO BE SEALED USING CUP HEAD BOLTS AS SHOWN IN DETAIL 1.
7. LIFTING BRACKETS HAVE BEEN DESIGNED FOR VERTICAL LIFTING ONLY. THEY MUST NOT BE USED FOR ANY OTHER LIFTING OPERATIONS.
8. FOR LIFTING BRACKETS FOR INCLINED LIFT REFER TO DRAWING No. NR/CIV/SD/1841.
9. IT MUST BE ENSURED THE LIFTING SHACKLES TO BE USED WILL FIT THE LIFTING BRACKETS.
10. THE INSIDE OF THE LIFTING HOLES TO BE SMOOTH AND FREE OF SHARP EDGES AND NICKS.
11. ALL BOLTS TO BE CHECKED AS SPANNER TIGHT BEFORE LIFTING.
12. BASE PLATE TO RECEIVE 100% UT AFTER WELDING TO ENSURE NO LAMINAR DEFECTS.

Rev	Date	Description of revision	Design'd	C'kd
B	APR 10	EUROCODE ISSUE	MK	AGW
A	APR 10	FIRST ISSUE	MK	AGW
P2	29.07.09	DRAFT FORM B ISSUE	MK	AGW
P1	27.03.09	DRAFT FOR REVIEW	MK	AGW

Network Rail

Network Rail Infrastructure Ltd
Registered Office:
Kings Place
90 York Way
London
N1 9AG

	Name	Position	Signature	Date
Approved	Paul Clark	Snr. Proj. Eng. Manager Infrastructure Investment Building and Civils	P.C.	APR 10

Master copy with original signatures held by Network Rail HQ
CIVIL ENGINEERING STANDARD DESIGN

© COPYRIGHT NETWORK RAIL 2009

UNDERBRIDGE
ANCILLARY ITEM DRAWINGS

LIFTING BRACKET
VERTICAL LIFT

Scale: AS SHOWN

Drawing Number: NR/CIV/SD/1840 B

Documents
Document Sharing Hub

Licensee=Weston Williamson/5989497001, User=sam, albett
Not for Resale, 03/27/2016 21:30:52 MDT

Copyright Network Rail
Provided by IHS under license with Network Rail
No reproduction or networking permitted without license from IHS