Supplementary Information

The following information is associated with Network Rail Standard:
NR CIV/SD/2004 Rev B

Additional Content Access

Click the link below to access CAD version of this drawing.

CAD Drawing

- CIV/SD/2004

If you have any questions, or need assistance, please contact **IHS Support**

Information accessed via the links above is the property of the Copyright holder

IHS Additional Content Page

Documents
Document Sharing Hub

Copyright Network Rail
Provided by IHS under license with Network Rail
No reproduction or networking permitted without license from IHS
Full document details: NR NR-CIV-SD-2004 ISSUE B 2012

Licensee=Weston Williamson/5989497001, User=sam, albett
Not for Resale, 03/27/2016 19:58:56 MDT

Full document details: NR NR-CIV-SD-2004 ISSUE B 2012

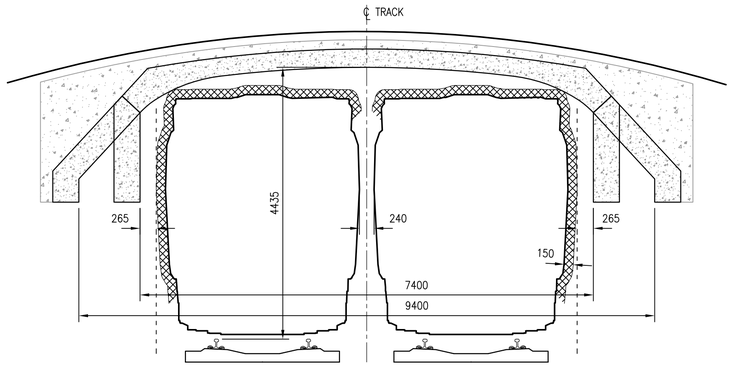

STRAIGHT TRACK

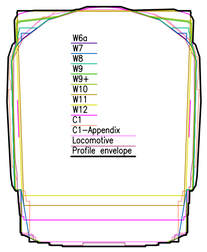

STANDARD VEHICLE GAUGES
STRAIGHT TRACK

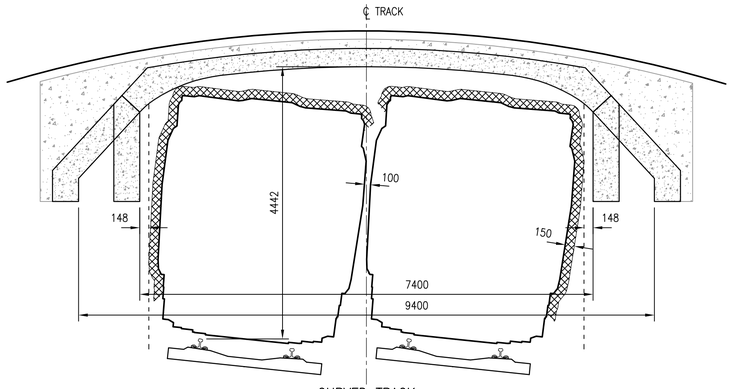

CURVED TRACK
150mm CANT

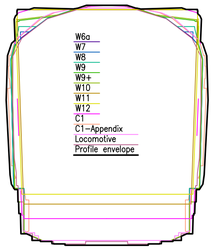

STANDARD VEHICLE GAUGES
CURVED TRACK (R=360M)

NON–OHLE ELECTRIFIED TRACK

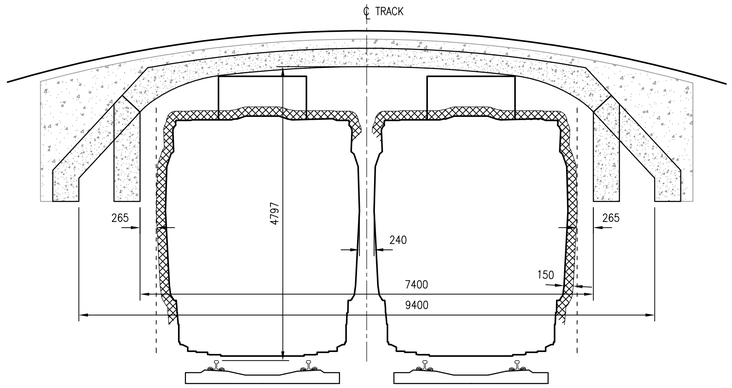

STRAIGHT TRACK

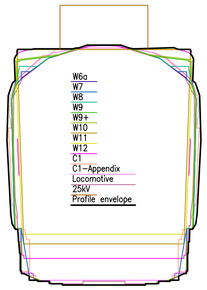

STANDARD VEHICLE GAUGES
STRAIGHT TRACK

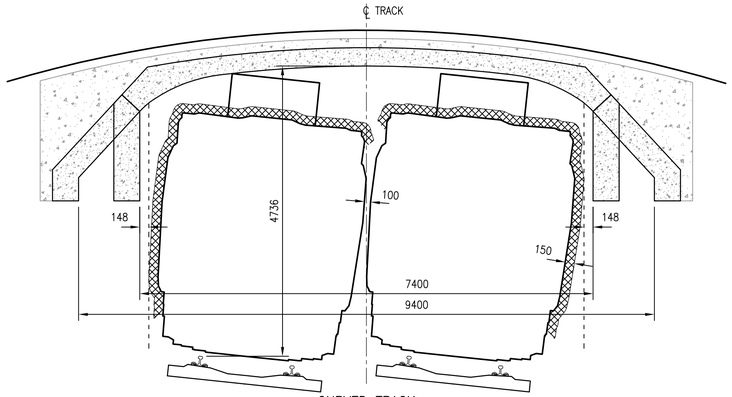

CURVED TRACK
150mm CANT

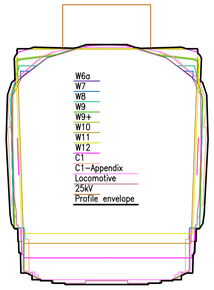

STANDARD VEHICLE GAUGES
CURVED TRACK (R=360M)

OHLE ELECTRIFIED TRACK

SCALE 1:50

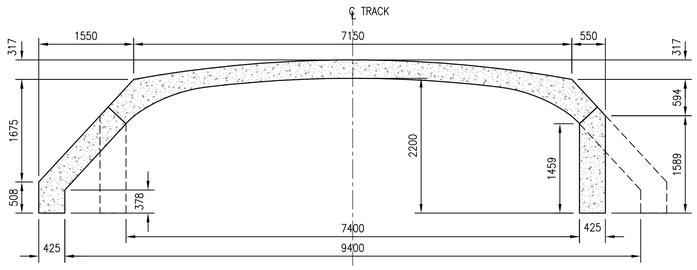

CONCRETE PROFILE

SCALE 1:50

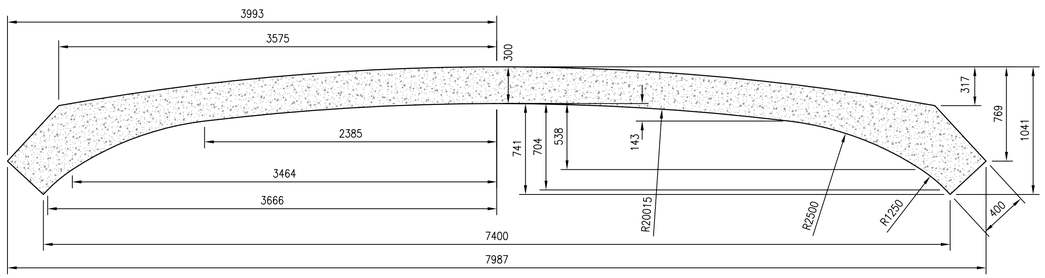

MIDDLE SECTION

SCALE 1:25

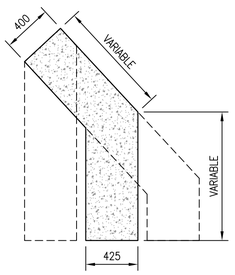

VARIABLE LEG

SCALE 1:25

DRAWING No. NR/CIV/SD/2004

NOTES

1. FOR GENERAL NOTES REFER TO DRAWING No. NR/CIV/SD/2001.

NOTE
ANY SPAN BETWEEN:
7.4m AND 9.4m, INCREMENT OF 5mm.
ANY SKEW BETWEEN:
0deg AND 45deg, LEFT OR RIGHT.
ANY CLEARANCE BETWEEN PARAPETS:
BETWEEN 4.5m AND 12.5m.
ANY INTERNAL UNIT WIDTH BETWEEN:
900mm AND 1250mm, INCREMENT OF 5mm.

Rev	Date	Description of revision	Designed	C'kd
B	27.04.12	SECOND ISSUE	SzT	SWF
A	12.10.10	FIRST ISSUE	SzT	SWF

Network Rail

Network Rail Infrastructure Ltd. Registered Office:
Kings Place, 90 York Way, London, N1 9AG

Approved	P. Clark	Head of Engineering IP Central	PC	Apr 2013
	Name	Position	Signature	Date

Master copy with original signatures held by Network Rail HQ
CIVIL ENGINEERING STANDARD DESIGN

© COPYRIGHT NETWORK RAIL 2013

STANDARD CONARCH OVERBRIDGE

SOFFIT TUNNEL PROFILE SHOWING CLEARANCES FOR NON–OHLE ELECTRIFIED & OHLE ELECTRIFIED TRACK

Scale	AS SHOWN
Drawing Number	NR/CIV/SD/2004 B

Copyright Network Rail
Provided by NR under licence with Network Rail
Printed on behalf of Network Rail licensee from NR5
Licence reference WWW.0000095961.001
Date 27/04/2013 Time 08:00 User-name: allan

Documents
Document Sharing Hub