Supplementary Information

The following information is associated with Network Rail Standard:
**NR CIV/SD/2033** Rev B

## Additional Content Access

Click the link below to access CAD version of this drawing.

### CAD Drawing

- CIV/SD/2033

If you have any questions, or need assistance, please contact **IHS Support**

Information accessed via the links above is the property of the Copyright holder

**IHS Additional Content Page**

Documents
Document Sharing Hub

Copyright Network Rail
Provided by IHS under license with Network Rail
No reproduction or networking permitted without license from IHS
Full document details: NR NR-CIV-SD-2033 ISSUE B 2012

Licensee=Weston Williamson/5989497001, User=sam, albett
Not for Resale, 03/27/2016 19:59:19 MDT

Full document details: NR NR-CIV-SD-2033 ISSUE B 2012

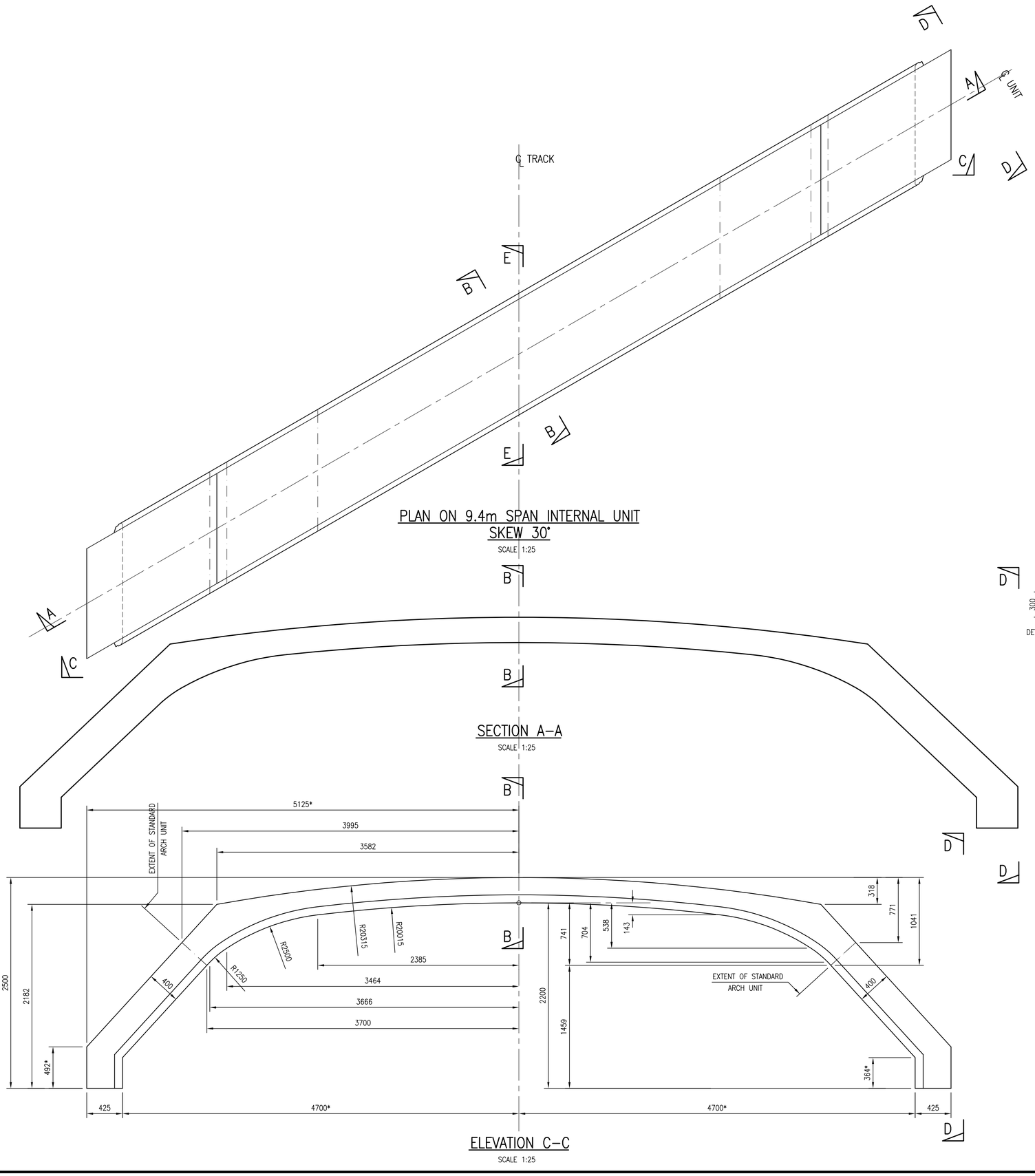


DRAWING No. NR/CIV/SD/2033

NOTES

1. FOR GENERAL NOTES REFER TO DRAWING No. NR/CIV/SD/2001.

| Rev | Date | Description of revision | Designed | C'kd |
|---|---|---|---|---|
| B | 27.04.12 | SECOND ISSUE | SzT | SWF |
| A | 12.10.10 | FIRST ISSUE | SzT | SWF |

Network Rail

Network Rail Infrastructure Ltd. Registered Office: Kings Place, 90 York Way, London, N1 9AG

| | Name | Position | Signature | Date |
|---|---|---|---|---|
| Approved | P. Clark | Head of Engineering IP Central | PC | Apr 2013 |

Master copy with original signatures held by Network Rail HQ CIVIL ENGINEERING STANDARD DESIGN

© COPYRIGHT NETWORK RAIL 2013

# STANDARD CONARCH OVERBRIDGE

## GENERAL ARRANGEMENT 9.4m INTERNAL UNIT LEFT SKEW 30°

Scale: AS SHOWN

Drawing Number: NR/CIV/SD/2033 B

Documents Document Sharing Hub

Copyright Network Rail
Provided by IHS under licence with Network Rail
Not to be reproduced or disclosed to a third party without licence from IHS
Licensee=Halcrow Yolande/5959672001, User=anon, date=