Supplementary Information

The following information is associated with Network Rail Standard:
NR CIV/SD/204 Rev D

Additional Content Access

Click the link below to access CAD version of this drawing.

CAD Drawing

- CIV/SD/204

If you have any questions, or need assistance, please contact **IHS Support**

Information accessed via the links above is the property of the Copyright holder

IHS Additional Content Page

Documents
Document Sharing Hub

Copyright Network Rail
Provided by IHS under license with Network Rail
No reproduction or networking permitted without license from IHS
Full document details: NR NR-CIV-SD-204 ISSUE D 2011

Licensee=Weston Williamson/5989497001, User=sam, albett
Not for Resale, 03/27/2016 20:51:47 MDT

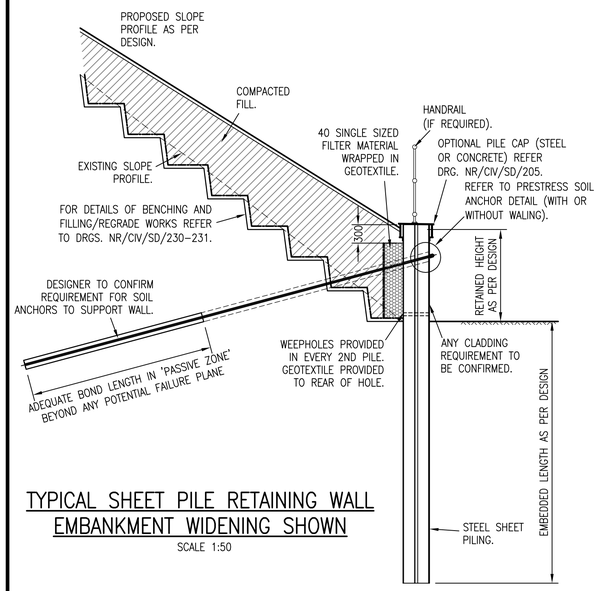

TYPICAL SHEET PILE RETAINING WALL EMBANKMENT WIDENING SHOWN

SCALE 1:50

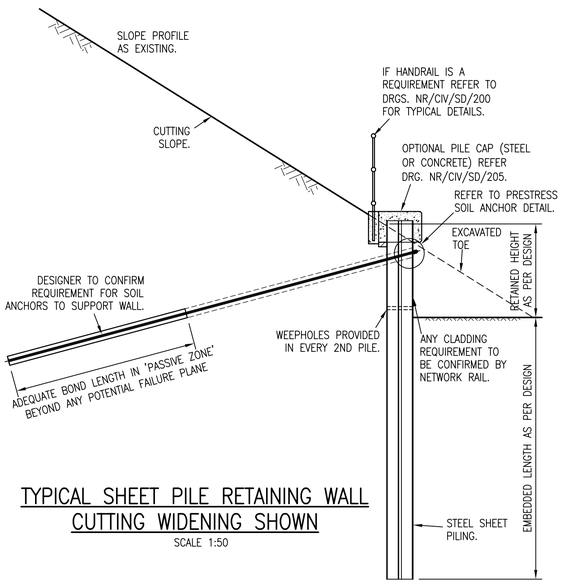

TYPICAL SHEET PILE RETAINING WALL CUTTING WIDENING SHOWN

SCALE 1:50

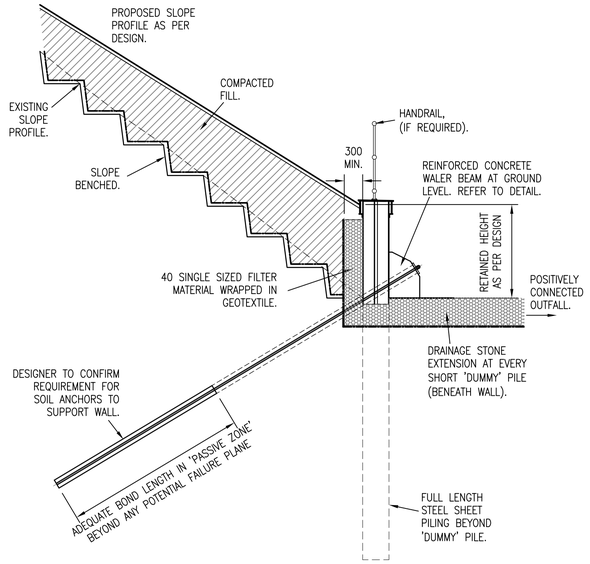

SECTION C–C

SCALE 1:50

NOTES CONT.

E GROUT

E1 CEMENTITIOUS GROUT FOR SOIL ANCHOR INSTALLATION SHALL HAVE A MINIMUM CUBE STRENGTH OF 40N/mm² (28 DAYS). WATER/CEMENT RATIO NOT TO EXCEED 0.45 GROUT CUBE SAMPLES (3NO.) ARE TO BE TAKEN AND TESTED INITIALLY EVERY 5TH SOIL ANCHOR INSTALLATION.

F CONCRETE

F1 CONCRETE TO BE IN ACCORDANCE WITH BS. 8500 AND EN 206–1. A COMPRESSIVE STRENGTH OF C35/45 IS REQUIRED FOR THE CONCRETE WALER BEAM.

G BACKFILL

G1 CLASS 6N GRANULAR BACKFILL TO BE COMPACTED BEHIND THE RETAINING WALL. OTHER CLASSES OF BACKFILL MAY BE CONSIDERED FOR USE BEHIND THE WALL SUBJECT TO THE NECESSARY LABORATORY CLASSIFICATION AND STRENGTH TESTS AND WALL STABILITY DESIGN.

H REAR OF WALL DRAINAGE

H1 THE REQUIREMENT FOR REAR OF WALL DRAINAGE TO BE CONFIRMED BY THE DESIGNER. DRAINAGE SYSTEMS ARE TO BE PROPOSED IN A SITE SPECIFIC FORM A / FORM B, ENSURING THEY POSSESS THE NECESSARY FLOW CHARACTERISTICS AND CAN BE ADEQUATELY MAINTAINED.

DRAWING No. NR/CIV/SD/204

NOTES

A1 FOR GENERAL NOTES SEE DRG NR/CIV/SD/200.

FOR GENERIC RISK ASSESSMENT, REFER TO DRG NR/CIV/SD/200 TABLE 1. DESIGNER TO COMPILE SITE SPECIFIC RISK ASSESSMENT.

A2 DESIGNER WILL NEED TO CONFIRM THE WALL AND SLOPE STABILITY AT ALL CONSTRUCTION STAGES.

B SHEET PILING

B1 THE GROUND INVESTIGATION SHALL CONFIRM THE GROUND CONDITIONS TO A DEPTH BELOW THE PROPOSED PILE TOE, TO ENSURE THE STABILITY OF THE WALL AND TO CONFIRM THE PILE INSTALLATION METHODOLOGY.

B2 THE DESIGN OF THE PILED WALL SHALL BE IN ACCORDANCE WITH EN 1993–5. SIZE OF PILE SECTION TO ALLOW FOR A SUFFICIENT CORROSION ALLOWANCE FOR THE DESIGN LIFE DURATION (USUALLY 120 YEARS) AND PILE INSTALLATION REQUIREMENTS (DRIVABILITY).

B3 ALL STEEL FOR SHEET PILES SHALL BE MANUFACTURED TO BS EN 10248. GRADE OF STEEL IS S270 GP MINIMUM.

B4 THE TYPE OF PILE SHOWN IS THE ARCELOR PU18–1. OTHER PILE TYPES MAY BE USED SUBJECT TO A DESIGN CHECK.

C STEELWORK

C1 STEELWORK TO BE GRADE S275 (UNLESS NOTIFIED OTHERWISE) IN ACCORDANCE WITH EN 1993–1 AND BS EN 10025.

C2 ALL STEELWORK EXCEPT SHEET PILES TO BE HOT DIP GALVANISED TO BS EN ISO 1461 TO ACHIEVE A COATING THICKNESS = 85 MICRONS.

C3 ALL WELDING WORKS SHALL BE CARRIED OUT IN ACCORDANCE WITH BS EN 1011.

D SOIL ANCHORS

D1 IF THE WALL DESIGN REQUIRES ADDITIONAL SUPPORT SOIL ANCHORS SHALL BE PROVIDED, DESIGNED TO BS EN 1997. DESIGNER TO CONFIRM REQUIREMENT IN SITE SPECIFIC FORM A / FORM B. THE PROPERTIES OF THE SOIL ANCHORS SHALL BE CONFIRMED BY THE DESIGNER (LENGTH, BORE DIAMETER ETC). IT IS ENVISAGED SUITABILITY TESTS WILL BE REQUIRED TO VERIFY THE ANCHOR DESIGN.

D2 THE DESIGNER SHALL CONFIRM THE MOVEMENTS REQUIRED TO MOBILISE THE REQUIRED LOADS IN THE SOIL ANCHORS ARE ACCEPTABLE. DESIGNER TO CONSIDER PROVIDING A PRELOAD TO REDUCE MOVEMENTS.

D3 SOIL ANCHORS SHALL BE DOUBLE CORROSION–PROTECTED. THE REQUIREMENT FOR PROTECTIVE COATING SHALL BE DETERMINED BY THE DESIGNER IN DETERMINING THE APPRORIATE SACRIFICIAL THICKNESS. REFERENCE CAN BE MADE TO SECTION 9 OF CIRIA GUIDE C637. APPROPRIATE ANCHOR HEAD PROTECTION SHALL BE PROVIDED, EXAMPLES SHOWN ON THIS DRAWING AND NR/CIV/SD/206.

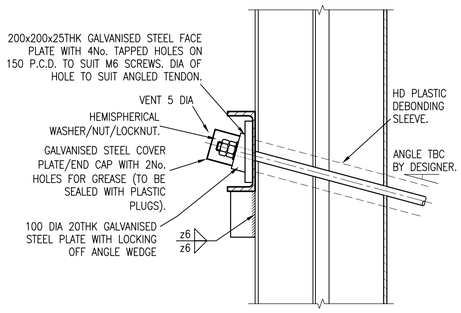

SECTION A–A

SCALE 1:10

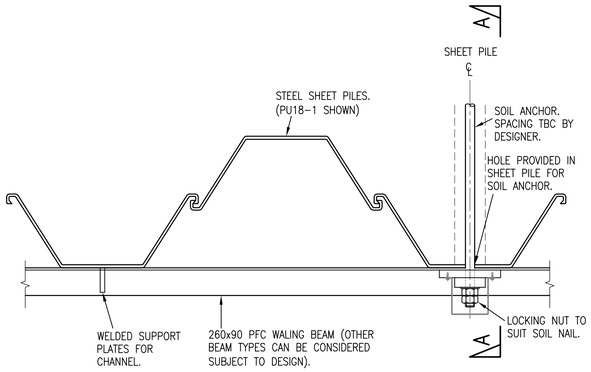

PRESTRESS SOIL ANCHOR DETAIL FOR SHEET PILE WALL WITH WALER BEAM

SCALE 1:10

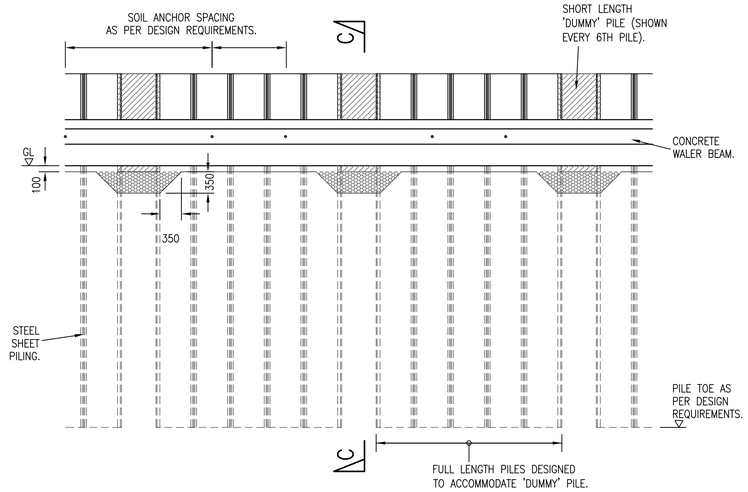

TYPICAL ELEVATION OF SHEET PILED RETAINING WALL WITH 'DUMMY' PILES FOR DRAINAGE

SCALE 1:50

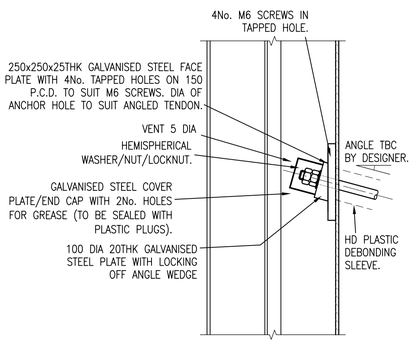

SECTION B–B

SCALE 1:10

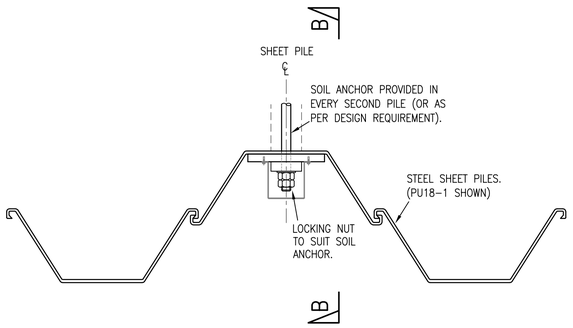

PRESTRESS SOIL ANCHOR DETAIL FOR SHEET PILE WALL – NO WALER BEAM

SCALE 1:10

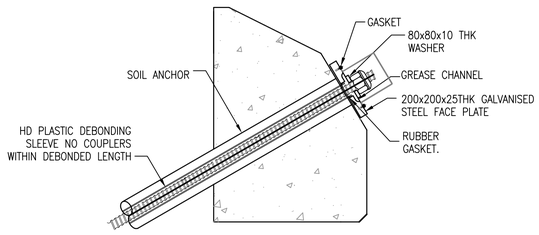

EXAMPLE ASSEMBLY DETAIL OF SOIL ANCHOR

SCALE 1:10

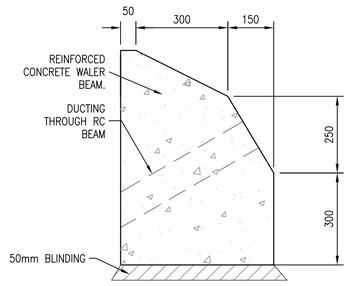

TYPICAL REINFORCED CONCRETE INSITU WALER BEAM SECTION

SCALE 1:10

Rev	Date	Description of revision	Design'd	C'kd
D	MAY 2011	FOURTH ISSUE	RKA	AW
C	19.03.08	THIRD ISSUE	HCHS	NGAY

Network Rail

Network Rail Infrastructure Ltd. Registered Office: Kings Place, 90 York Way, London, N1 9AG

	Name	Position	Signature	Date
Approved	P CLARK	Senior Prog. Eng. Manager Investment Projects Building & Civils	PC	MAY 2011

Master copy with original signatures held by Network Rail HQ CIVIL ENGINEERING STANDARD DESIGN

© COPYRIGHT NETWORK RAIL 2011

STANDARD DETAIL

SHEET PILE RETAINING WALL

Scale	AS SHOWN @ A1
Drawing Number	NR/CIV/SD/204 D

Full document details: NR NR-CIV-SD-204 ISSUE D 2011
Documents Document Sharing Hub
Licensee:Hellenic Wilkinson(c0005895002). User:sam.elliott
Copyright Network Rail
Provided by IHS under licence with Network Rail
Reproduced on behalf of Network Rail licence from IHS