The following information is associated with Network Rail Standard:
NR CIV/SD/2040 Rev B

Additional Content Access

Click the link below to access CAD version of this drawing.

CAD Drawing

- CIV/SD/2040

If you have any questions, or need assistance, please contact **IHS Support**

Information accessed via the links above is the property of the Copyright holder

IHS Additional Content Page

--`,,,,,,`,,,,,,`,,`,,,,,,,,`-`-`,,`,,`,`,,`---

Documents
Document Sharing Hub

Copyright Network Rail
Provided by IHS under license with Network Rail
No reproduction or networking permitted without license from IHS
Full document details: NR NR-CIV-SD-2040 ISSUE B 2012

Licensee=Weston Williamson/5989497001, User=sam, albett
Not for Resale, 03/27/2016 19:59:39 MDT

Full document details: NR NR-CIV-SD-2040 ISSUE B 2012

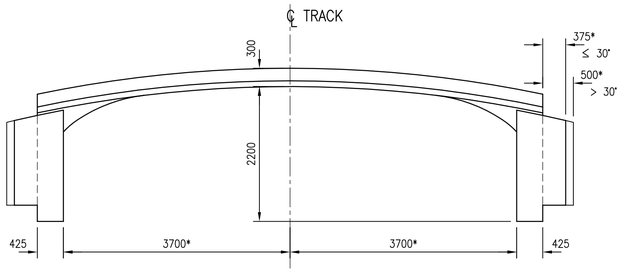

ELEVATION ON 7.4m SPAN EDGE UNIT

SCALE 1:50

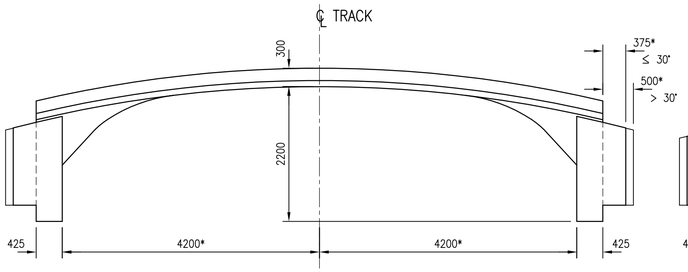

ELEVATION ON 8.4m SPAN EDGE UNIT

SCALE 1:50

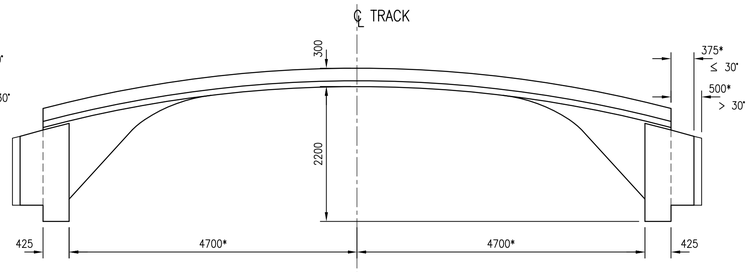

ELEVATION ON 9.4m SPAN EDGE UNIT

SCALE 1:50

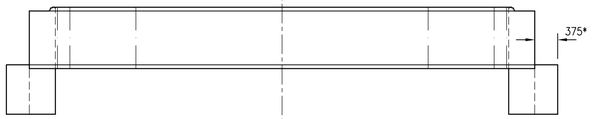

SQUARE PLAN

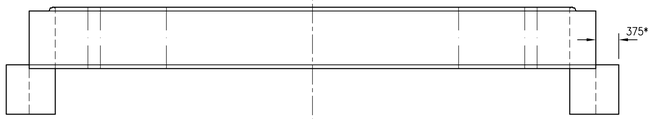

SQUARE PLAN

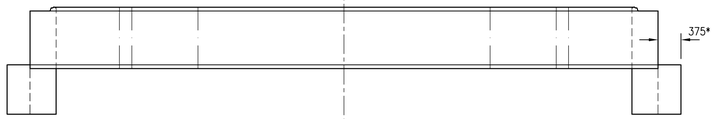

SQUARE PLAN

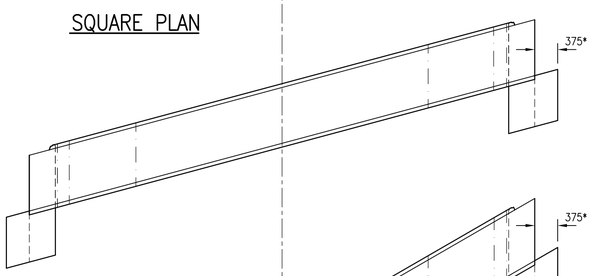

SKEW 15°

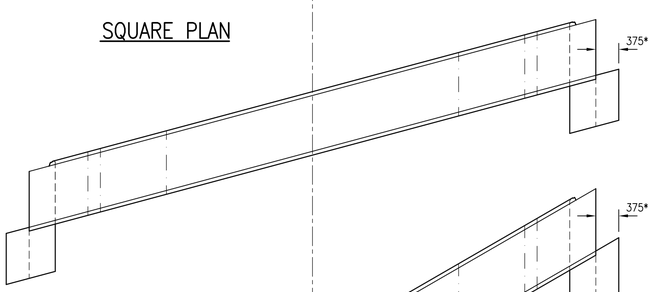

SKEW 15°

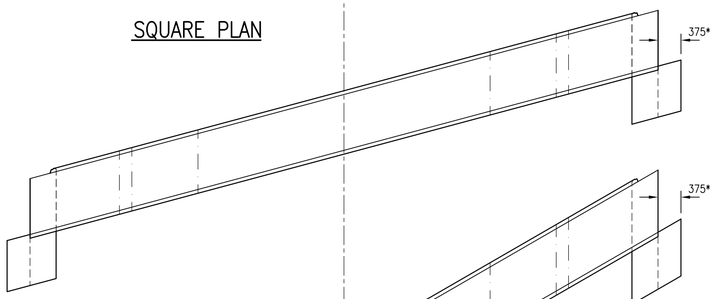

SKEW 15°

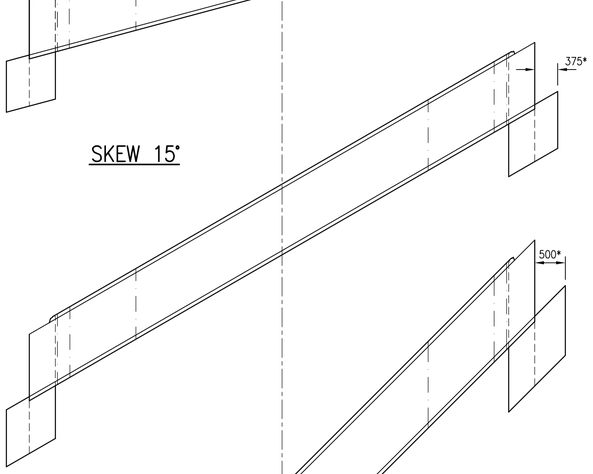

SKEW 30°

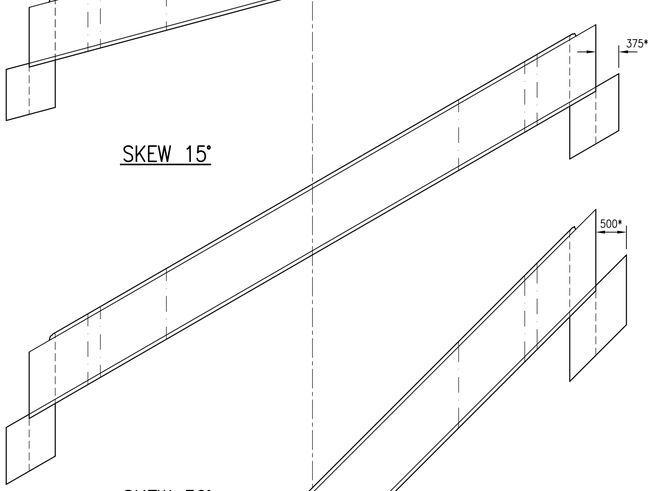

SKEW 30°

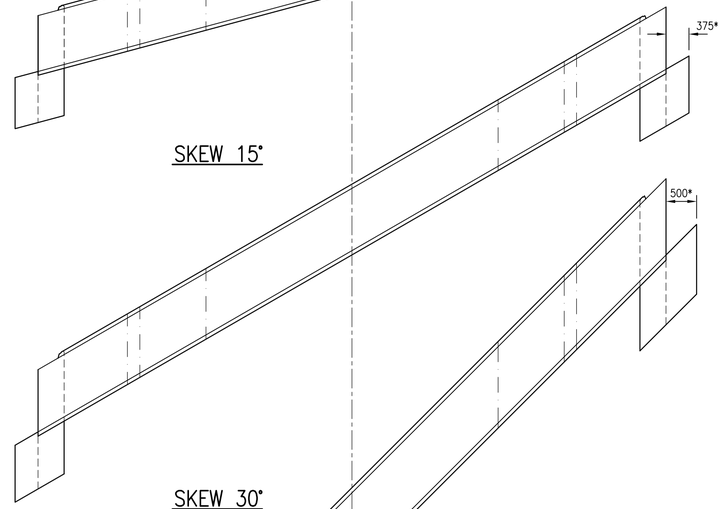

SKEW 30°

NOTE
LEFT SKEW UNITS SHOWN
RIGHT SKEW UNITS SIMILAR BUT
HANDED ABOUT TRACK CENTRELINE

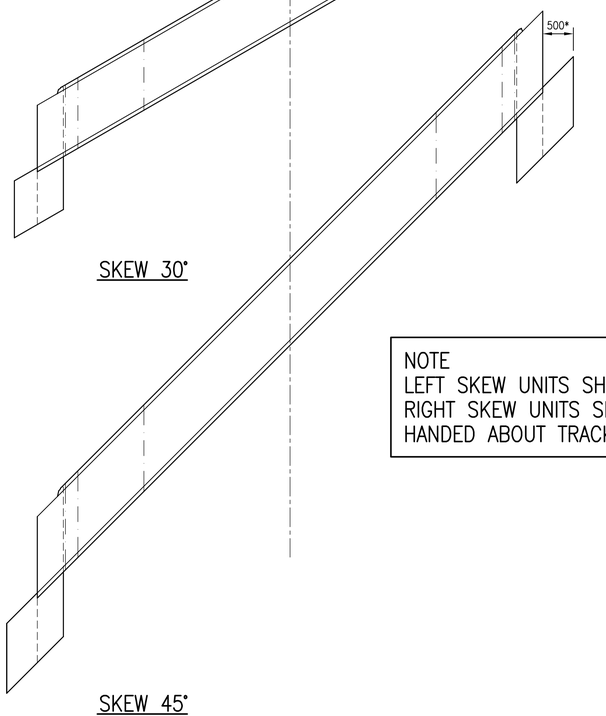

SKEW 45°

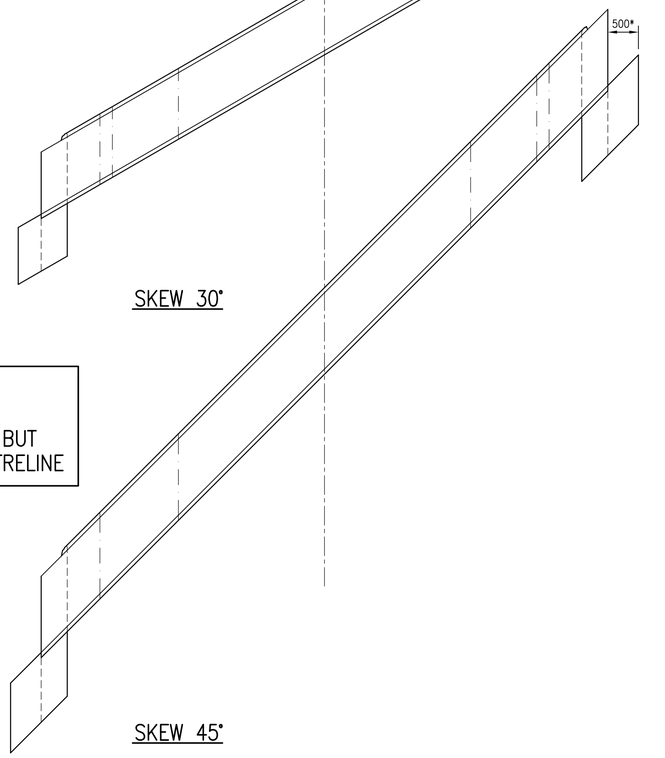

SKEW 45°

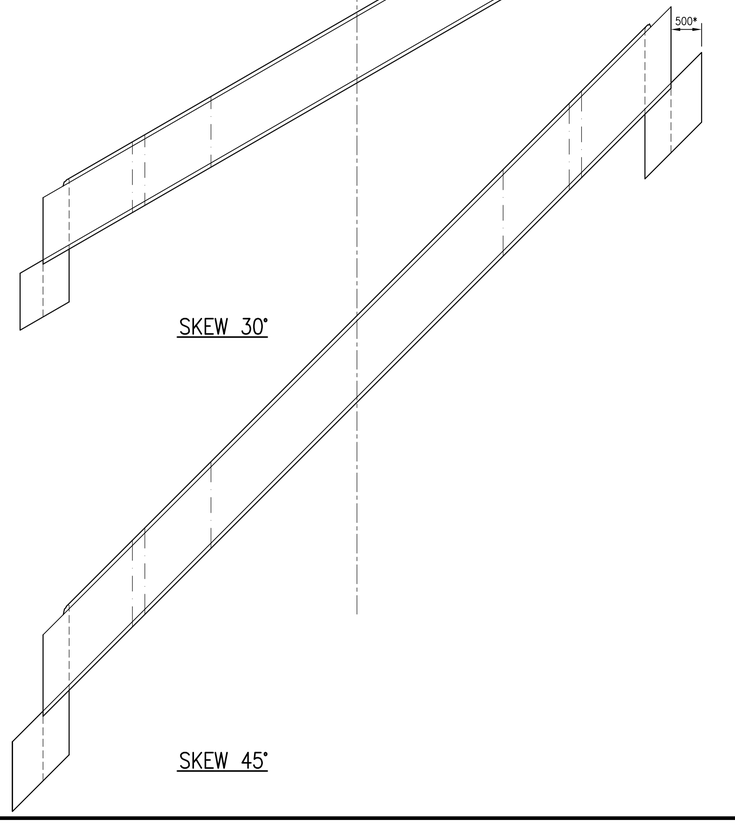

SKEW 45°

DRAWING No. NR/CIV/SD/2040

NOTES

1. FOR GENERAL NOTES REFER TO DRAWING No. NR/CIV/SD/2001.

NOTE
ANY SPAN BETWEEN:
7.4m AND 9.4m, INCREMENT OF 5mm.
ANY SKEW BETWEEN:
0deg AND 45deg, LEFT OR RIGHT.

Rev	Date	Description of revision	Designed	C'kd
B	27.04.12	SECOND ISSUE	SzT	SWF
A	12.10.10	FIRST ISSUE	SzT	SWF

Network Rail

Network Rail Infrastructure Ltd. Registered Office:
Kings Place, 90 York Way, London, N1 9AG

	Name	Position	Signature	Date
Approved	P. Clark	Head of Engineering IP Central	PC	Apr 2013

Master copy with original signatures held by Network Rail HQ
CIVIL ENGINEERING STANDARD DESIGN

© COPYRIGHT NETWORK RAIL 2013

STANDARD CONARCH OVERBRIDGE

GENERAL ARRANGEMENT
TYPICAL EXTERNAL UNIT

Scale	1:50
Drawing Number	NR/CIV/SD/2040 B

Copyright Network Rail
Provided by NR under licence with Network Rail
Printed on behalf of Network Rail by Mr Stephen Wilson on 12/03/2013 Licence expires from 1/01
Document Sharing Hub
AVA Documents