Supplementary Information

The following information is associated with Network Rail Standard:
NR CIV/SD/2054 Rev B

Additional Content Access

Click the link below to access CAD version of this drawing.

CAD Drawing

- CIV/SD/2054

If you have any questions, or need assistance, please contact **IHS Support**

Information accessed via the links above is the property of the Copyright holder

IHS Additional Content Page

Documents
Document Sharing Hub

Copyright Network Rail
Provided by IHS under license with Network Rail
No reproduction or networking permitted without license from IHS
Full document details: NR NR-CIV-SD-2054 ISSUE B 2012

Licensee=Weston Williamson/5989497001, User=sam, albett
Not for Resale, 03/27/2016 19:54:45 MDT

Full document details: NR NR-CIV-SD-2054 ISSUE B 2012

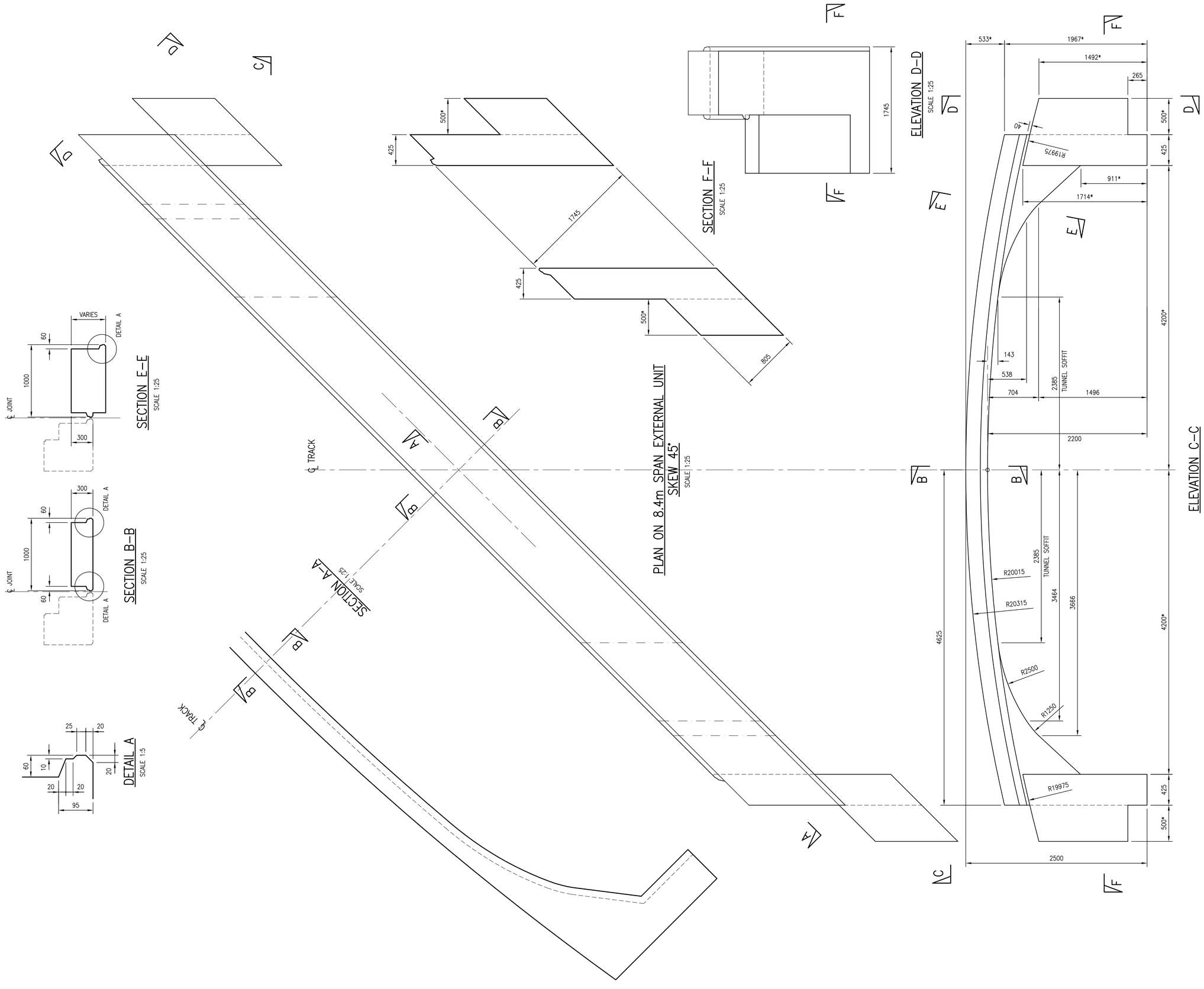

DRAWING No. NR/CIV/SD/2054

NOTES

1. FOR GENERAL NOTES REFER TO DRAWING No. NR/CIV/SD/2001.

Rev	Date	Description of revision	Designed	C'kd
B	27.04.12	SECOND ISSUE	SzT	SWF
A	12.10.10	FIRST ISSUE	SzT	SWF

Network Rail

Network Rail Infrastructure Ltd. Registered Office:
Kings Place, 90 York Way, London, N1 9AG

Approved	P. Clark	Head of Engineering IP Central	PC	Apr 2013
	Name	Position	Signature	Date

Master copy with original signatures held by Network Rail HQ
CIVIL ENGINEERING STANDARD DESIGN

© COPYRIGHT NETWORK RAIL 2013

STANDARD CONARCH OVERBRIDGE

GENERAL ARRANGEMENT 8.4m EXTERNAL UNIT LEFT SKEW 45°

Scale	AS SHOWN	
Drawing Number	NR/CIV/SD/2054	B

AVA Documents
Document Sharing Hub

Copyright Network Rail
Provided by IHS under licence with Network Rail
Licensee=Mott MacDonald Limited/5944150001, User=sam, allrett
No reproduction or networking permitted without licence from IHS