Supplementary Information

The following information is associated with Network Rail Standard:
NR CIV/SD/206 Rev C

Additional Content Access

Click the link below to access CAD version of this drawing.

CAD Drawing

- CIV/SD/206

If you have any questions, or need assistance, please contact **IHS Support**

Information accessed via the links above is the property of the Copyright holder

IHS Additional Content Page

Documents
Document Sharing Hub

Copyright Network Rail
Provided by IHS under license with Network Rail
No reproduction or networking permitted without license from IHS
Full document details: NR NR-CIV-SD-206 ISSUE C 2011

Licensee=Weston Williamson/5989497001, User=sam, albett
Not for Resale, 03/27/2016 20:52:56 MDT

Full document details: NR NR-CIV-SD-206 ISSUE C 2011

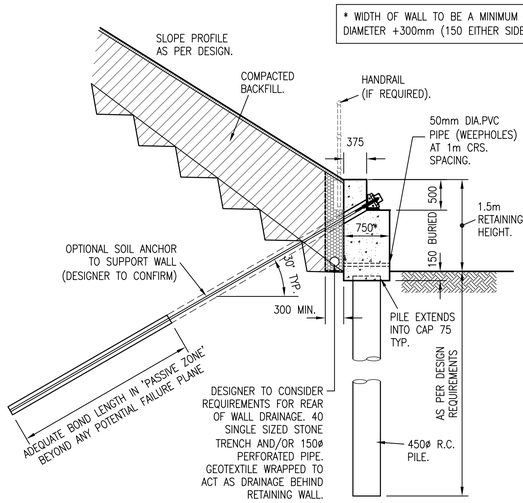

BORED PILE WALL
(EMBANKMENT WIDENING, 1.5m RETAINING HEIGHT SHOWN)
SCALE 1:50

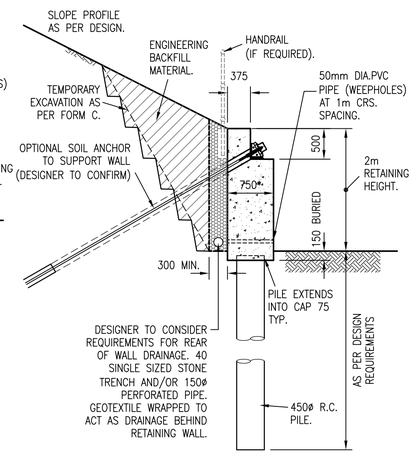

BORED PILE WALL
(CUTTING WIDENING 2m RETAINING HEIGHT SHOWN)
SCALE 1:50

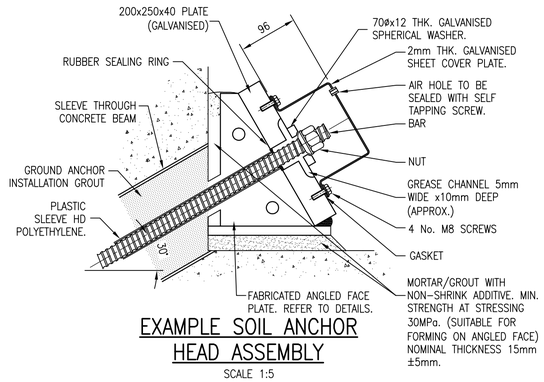

EXAMPLE SOIL ANCHOR HEAD ASSEMBLY
SCALE 1:5

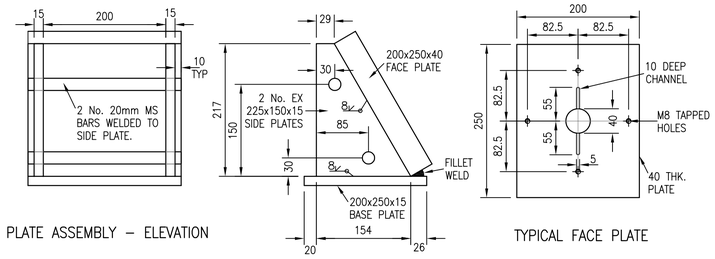

FABRICATED ANGLE PLATE DETAIL
SCALE 1:5

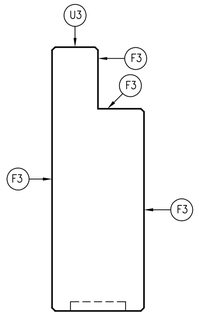

CONCRETE FINISHES
SCALE 1:25

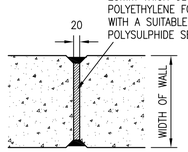

EXPANSION JOINT DETAIL FOR DIFFERENTIAL MOVEMENT BETWEEN BAYS ≤ 2mm
SCALE 1:10

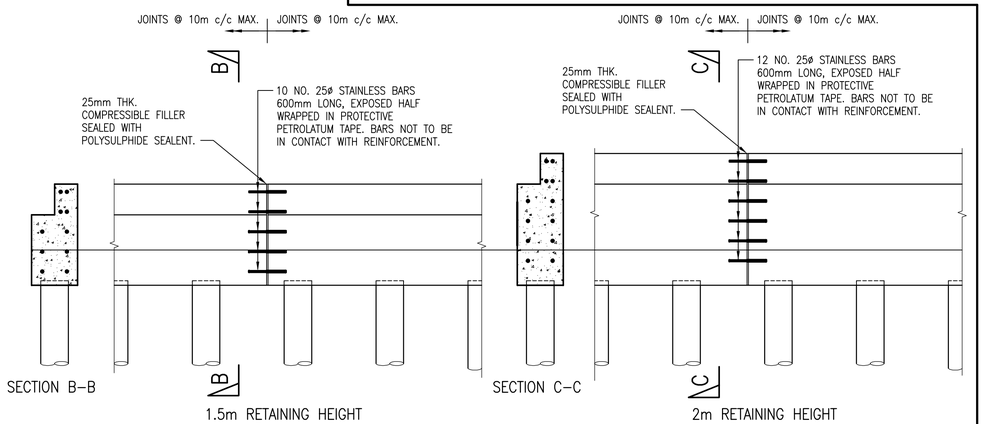

TYPICAL EXPANSION JOINTS FOR DIFFERENTIAL MOVEMENT BETWEEN ADJACENT BAYS > 2mm
SCALE 1:50

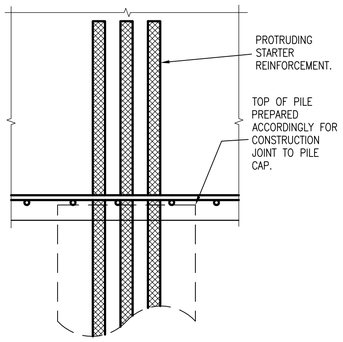

ELEVATION SHOWING PILE AND WALL REINFORCEMENT INTERFACE
SCALE 1:10

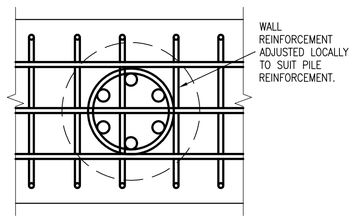

PLAN SHOWING PILE AND WALL REINFORCEMENT INTERFACE
SCALE 1:10

NOTES CONTINUED

D SOIL ANCHORS

D1 IF THE WALL DESIGN REQUIRES ADDITIONAL SUPPORT SOIL ANCHORS SHALL BE PROVIDED, DESIGNED TO BS EN 1997. DESIGNER TO CONFIRM REQUIREMENT IN SITE SPECIFIC FORM A / FORM B. THE PROPERTIES OF THE SOIL ANCHORS SHALL BE CONFIRMED BY THE DESIGNER (LENGTH, BORE DIAMETER ETC). IT IS ENVISAGED SUITABILITY TESTS WILL BE REQUIRED TO VERIFY THE ANCHOR DESIGN.

D2 THE DESIGNER SHALL CONFIRM THE MOVEMENTS REQUIRED TO MOBILISE THE REQUIRED LOADS IN THE SOIL ANCHORS ARE ACCEPTABLE. DESIGNER TO CONSIDER PROVIDING A PRELOAD TO REDUCE MOVEMENTS.

D3 SOIL ANCHORS SHALL BE DOUBLE CORROSION–PROTECTED. THE REQUIREMENT FOR PROTECTIVE COATING SHALL BE DETERMINED BY THE DESIGNER IN DETERMINING THE APPROPRIATE SACRIFICIAL THICKNESS. REFERENCE CAN BE MADE TO SECTION 9 OF CIRIA GUIDE C637. APPROPRIATE ANCHOR HEAD PROTECTION SHALL BE PROVIDED, EXAMPLES SHOWN ON THIS DRAWING AND NR/CIV/SD/204.

E GROUT

E1 CEMENTITIOUS GROUT FOR SOIL ANCHOR INSTALLATION SHALL HAVE A MINIMUM CUBE STRENGTH OF 40N/MM (28 DAYS). WATER/CEMENT RATIO NOT TO EXCEED 0.45 GROUT CUBE SAMPLES (3NO.) ARE TO BE TAKEN AND TESTED INITIALLY EVERY 5TH SOIL ANCHOR INSTALLATION.

F BACKFILL

F1 CLASS 6N GRANULAR BACKFILL TO BE COMPACTED BEHIND THE RETAINING WALL. OTHER CLASSES OF BACKFILL CAN BE CONSIDERED FOR USE BEHIND THE WALL SUBJECT TO THE NECESSARY LABORATORY CLASSIFICATION AND STRENGTH TESTS AND WALL STABILITY DESIGN.

G REAR OF WALL DRAINAGE

G1 THE REQUIREMENT FOR REAR OF WALL DRAINAGE TO BE CONFIRMED BY THE DESIGNER. DRAINAGE SYSTEMS ARE TO BE PROPOSED IN A SITE SPECIFIC FORM A / FORM B, ENSURING THEY POSSESS THE NECESSARY FLOW CHARACTERISTICS AND CAN BE ADEQUATELY MAINTAINED.

DRAWING No. NR/CIV/SD/206

NOTES

1 FOR GENERAL NOTES SEE DRG NR/CIV/SD/200.

2 FOR GENERIC RISK ASSESSMENT, REFER TO DRG NR/CIV/SD/200 TABLE 1. DESIGNER TO COMPILE SITE SPECIFIC RISK ASSESSMENT.

A GENERAL

A1 DESIGNER WILL NEED TO CONFIRM THE WALL AND SLOPE STABILITY AT ALL THE CONSTRUCTION STAGES.

A2 THE BORED PILE/CONCRETE WALL DETAILS MAY BE USED ON UPPER SECTIONS OF A SLOPE TO INTERSECT FAILURE PLANES AT A HIGHER LEVEL.

A3 THE GROUND INVESTIGATION SHALL CONFIRM THE GROUND CONDITIONS TO A DEPTH BELOW THE PROPOSED PILE TOE, TO ENSURE THE STABILITY OF THE WALL AND TO CONFIRM THE PILE INSTALLATION METHODOLOGY.

B REINFORCED CONCRETE

B1 REFER TO DRG NR/CIV/SD/209 FOR TYPICAL REINFORCEMENT DETAILS.

C STEELWORK

C1 STEELWORK TO BE GRADE S275 (UNLESS NOTIFIED OTHERWISE) IN ACCORDANCE WITH EN 1993–1 AND BS EN 10025.

C2 ALL STEELWORK TO BE HOT DIP GALVANISED TO BS EN ISO 1461 TO ACHIEVE A COATING THICKNESS = 85 MICRONS.

C3 ALL WELDING WORKS SHALL BE CARRIED OUT IN ACCORDANCE WITH BS EN 1011.

Rev	Date	Description of revision	Design'd	C'kd
C	MAY 2011	THIRD ISSUE	RKA	AW
B	25.05.07	SECOND ISSUE	HCHS	NGAY

Network Rail

Network Rail Infrastructure Ltd. Registered Office: Kings Place, 90 York Way, London, N1 9AG

Approved	P CLARK	Senior Prog. Eng. Manager Investment Projects Building & Civils	PC	MAY 2011
	Name	Position	Signature	Date

Master copy with original signatures held by Network Rail HQ CIVIL ENGINEERING STANDARD DESIGN

© COPYRIGHT NETWORK RAIL 2011

RETAINING WALLS

BORED PILE RETAINING WALL

Scale	AS SHOWN @ A1	
Drawing Number	NR/CIV/SD/206	REV. C

Licensee:nbrown Willoughby&Partners Ltd 20/09/2011 User:sam. allnutt
Copyright Network Rail
Provided by IHS under licence with Network Rail
No reproduction or networking permitted without licence from IHS

AVA Documents Document Sharing Hub