The following information is associated with Network Rail Standard:
NR CIV/SD/207 Rev A

Additional Content Access

Click the link below to access CAD version of this drawing.

CAD Drawing

- CIV/SD/207

If you have any questions, or need assistance, please contact **IHS Support**

Information accessed via the links above is the property of the Copyright holder

IHS Additional Content Page

Documents
Document Sharing Hub

Copyright Network Rail
Provided by IHS under license with Network Rail
No reproduction or networking permitted without license from IHS
Full document details: NR NR-CIV-SD-207 ISSUE A 2011

Licensee=Weston Williamson/5989497001, User=sam, albett
Not for Resale, 03/27/2016 20:51:08 MDT

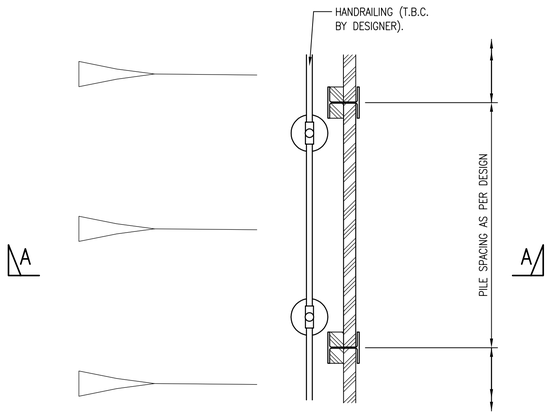

PLAN
SCALE 1:25

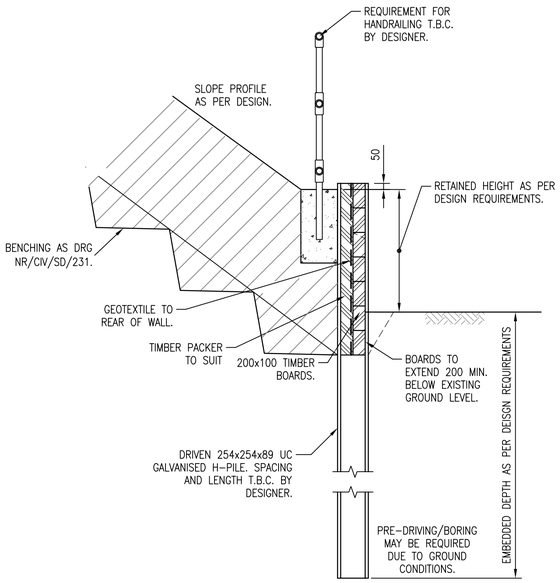

SECTION A–A
EMBANKMENT TOE WIDENING EXAMPLE
SCALE 1:25

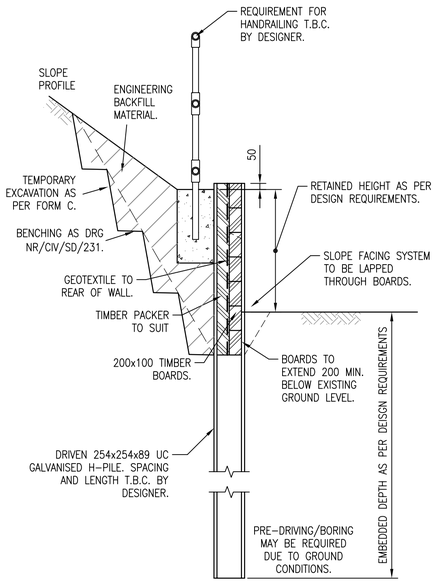

SECTION A–A
CUTTING WIDENING EXAMPLE
SCALE 1:25

EMBANKMENT WIDENING ENVISAGED CONSTRUCTION SEQUENCE

1) SERVICES SEARCH / PERMIT TO DIG IN PLACE
2) FORM C DESIGN COMPLETED IF DEEMED NECESSARY FOR SLOPE EXCAVATION (BENCHING)
3) DRIVE STEEL PILES TO DESIGN DEPTH.
4) INSTALL TIMBER PLANKS BETWEEN PILES (PLACE HIGHER PLANKS AS THE HEIGHT OF THE COMPACTED FILL INCREASES)
5) CONSTRUCT BENCHES IN EXISTING SLOPE TO RECEIVE NEW FILL
6) PLACE AND COMPACT FILL BEHIND WALL (GEOTEXTILE PLACED IMMEDIATELY BEHIND TIMBER PLANKS).
7) COMPLETE FINISHES TO SLOPE AND INSTALL HANDRAIL IF REQUIRED.

CUTTING WIDENING ENVISAGED CONSTRUCTION SEQUENCE

1) SERVICES SEARCH / PERMIT TO DIG IN PLACE
2) FORM C DESIGN COMPLETED FOR EXCAVATION WITHIN CUTTING SLOPE.
3) EXCAVATE CUTTING TOE TO ALLOW CONSTRUCTION OF WALL AS PER THE FORM C DESIGN.
4) DRIVE STEEL PILES TO DESIGN DEPTH.
5) INSTALL TIMBER PLANKS BETWEEN PILES (PLACE HIGHER PLANKS AS THE HEIGHT OF THE COMPACTED FILL INCREASES)
6) CONSTRUCT BENCHES IN EXISTING SLOPE TO RECEIVE NEW FILL
7) PLACE AND COMPACT FILL BEHIND WALL (GEOTEXTILE PLACED IMMEDIATELY BEHIND TIMBER PLANKS)
8) COMPLETE FINISHES TO SLOPE AND INSTALL HANDRAIL IF REQUIRED.

DRAWING No. NR/CIV/SD/207

NOTES

A1 FOR GENERAL NOTES SEE DRG. NR/CIV/SD/200.

A2 FOR GENERIC RISK ASSESSMENT, REFER TO DRG. NR/CIV/SD/200 TABLE 1. DESIGNER TO COMPILE SITE SPECIFIC RISK ASSESSMENT.

B GENERAL

B1 DESIGNER WILL NEED TO CONFIRM THE WALL AND SLOPE STABILITY AT ALL THE CONSTRUCTION STAGES.

B2 THE DESIGNER OF A SCHEME SHALL BE RESPONSIBLE FOR SPECIFYING THE REQUIRED PILE DEPTH AND SPACING.

B3 THIS RETAINING WALL TYPE IS NOT CONSIDERED SUITABLE FOR STABALISING EXISTING DEEP SEATED FAILURE MECHANISMS.

C SPECIFICATION

STEELWORK

C1 STEELWORK TO BE GRADE S275 MIN. (UNLESS NOTIFIED OTHERWISE) IN ACCORDANCE WITH EN 1993–1 AND BS EN 10025.

C2 ALL EXPOSED SECTIONS OF STEELWORK TO BE HOT DIP GALVANISED TO BS EN ISO 1461 TO ACHIEVE A COATING THICKNESS = 85 MICRONS. DESIGNER CAN CONSIDER OTHER PROTECTIVE TREATMENT TO STEELWORK TO PROVIDE REQUIRED DESIGN LIFE.

C3 ANY BLEMISHES ON THE EXPOSED STEEL COMPONENTS TO BE PAINTED WITH ZINC–BASED ANTI–CORROSION PAINT AFTER INSTALLATION.

PROTECTIVE TREATMENT

C4 THE PROTECTIVE SYSTEM SHALL BE IN ACCORDANCE WITH NR/SP/CIV/039 (REFERRED TO AS RT98)

C5 PROTECTIVE TREATMENTS SHALL BE APPLIED IN ACCORDANCE WITH NR/GN/CIV/002

BACKFILL

C6 GRANULAR FILL MATERIALS TO BE FREE DRAINING AND PLACED AND COMPACTED IN ACCORDANCE WITH THE SPECIFICATION FOR HIGHWAYS WORKS. SUITABLE FILL IS HA CLASS 6N GRANULAR FILL. OTHER CLASSES OF BACKFILL CAN BE CONSIDERED FOR USE BEHIND THE WALL SUBJECT TO THE NECESSARY LABORATORY CLASSIFICATION AND STRENGTH TESTS AND WALL STABILITY DESIGN.

TIMBER

C7 TIMBER SHALL BE D30 MINIMUM STRENGTH CLASS HARDWOOD IN ACCORDANCE WITH BS EN 338.

C8 ALL WOOD COMPONENTS ARE TO BE PRE–APPROVED BY THE EMPLOYER'S REPRESENTATIVE FOR SOURCE AND TREATMENT.

C9 FOR GUIDANCE ONLY:
THE MAXIMUM LENGTH OF D30 GRADE TIMBER BOARDS (OR PILE SPACING) FOR A RETAINED HEIGHT OF 1.5m IS IN THE ORDER OF 1.5m FOR A BACKFILL WITH A CHARACTERISTIC PHI' VALUE OF 35°.

Rev	Date	Description of revision	Design'd	C'kd
A	MAY 2011	FIRST ISSUE	RKA	AW

Network Rail
40 Melton Street
London NW1 2EE
Tel: 020–7557–8000

Approved	P CLARK	Senior Prog. Eng. Manager Investment Projects Building & Civils	PC	MAY 2011
	Name	Position	Signature	Date

Master copy with original signatures held by Network Rail HQ CIVIL ENGINEERING STANDARD DESIGN

© COPYRIGHT NETWORK RAIL 2011

RETAINING WALLS

DRIVEN KINGPOST RETAINING WALL (UNANCHORED)

Scale	AS SHOWN @ A1	
Drawing Number	NR/CIV/SD/207	REV. A

Full document details: NR NR-CIV-SD-207 ISSUE A 2011
Documents
Document Sharing Hub
Licensee:nelson.wilson@ricardo.com, User:sam.allen
Copyright Network Rail
Provided by IHS under licence with Network Rail
No reproduction or networking permitted without licence from IHS