Supplementary Information

The following information is associated with Network Rail Standard:
NR CIV/SD/208 Rev A

Additional Content Access

Click the link below to access CAD version of this drawing.

CAD Drawing

- CIV/SD/208

If you have any questions, or need assistance, please contact **IHS Support**

Information accessed via the links above is the property of the Copyright holder

IHS Additional Content Page

Documents
Document Sharing Hub

Copyright Network Rail
Provided by IHS under license with Network Rail
No reproduction or networking permitted without license from IHS
Full document details: NR NR-CIV-SD-208 ISSUE A 2011

Licensee=Weston Williamson/5989497001, User=sam, albett
Not for Resale, 03/27/2016 20:52:17 MDT

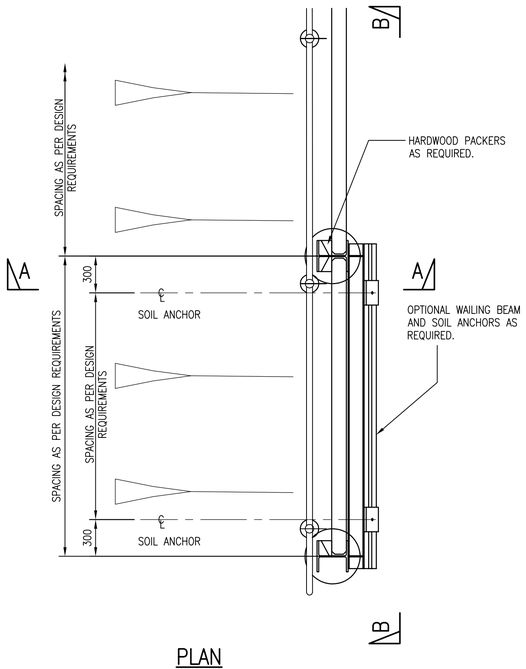

PLAN
SCALE 1:25

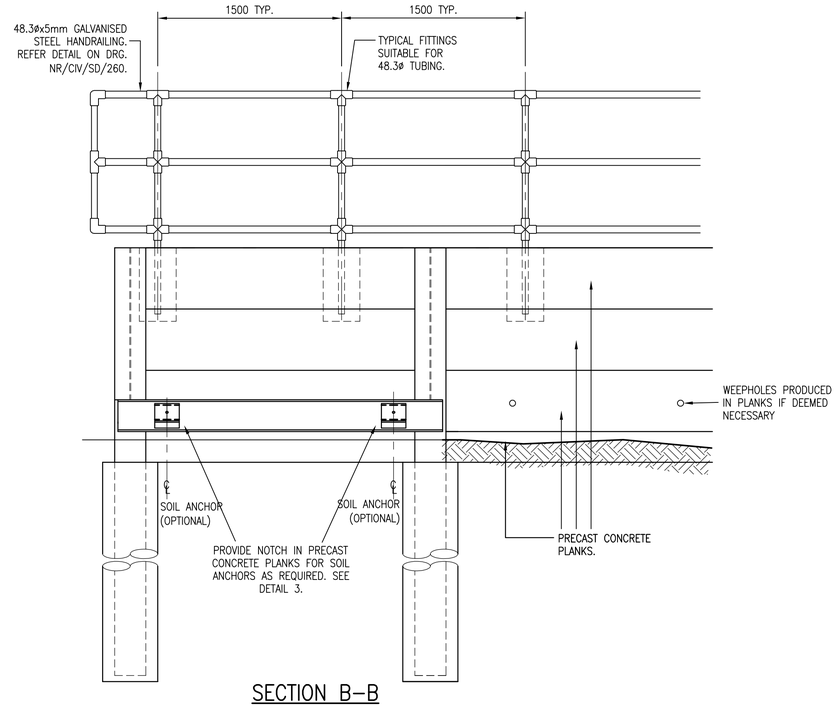

SECTION B–B
SCALE 1:25

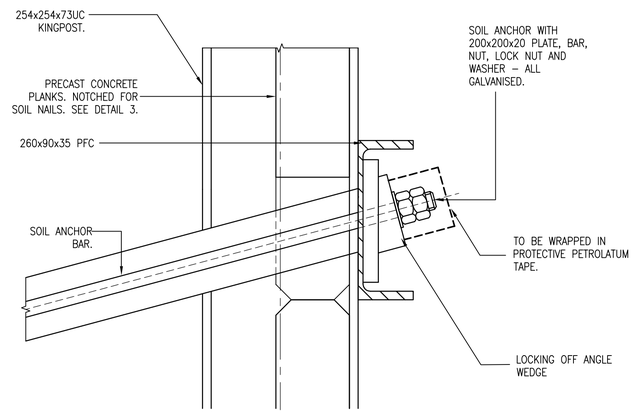

DETAIL 1
SCALE 1:5

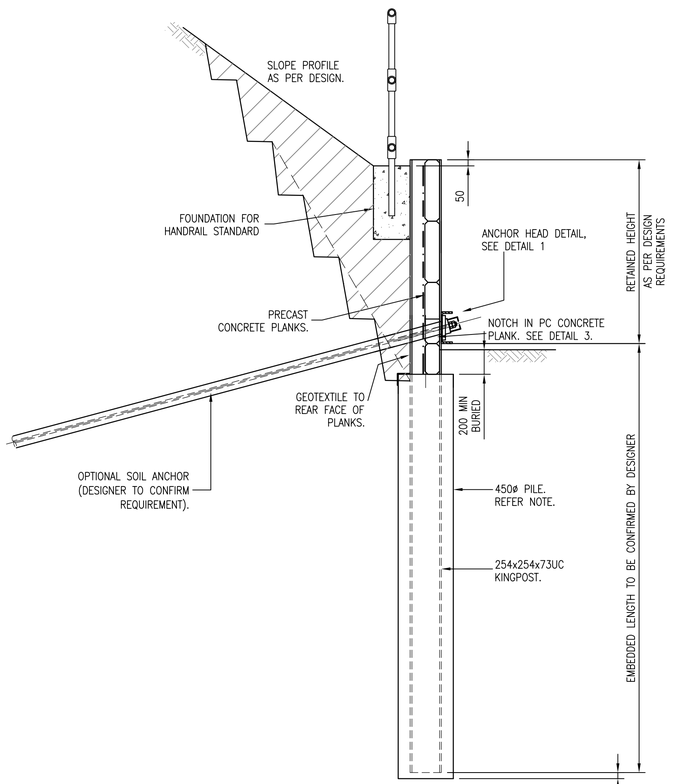

SECTION A–A
SCALE 1:25

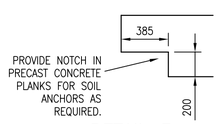

DETAIL 3
SCALE 1:25

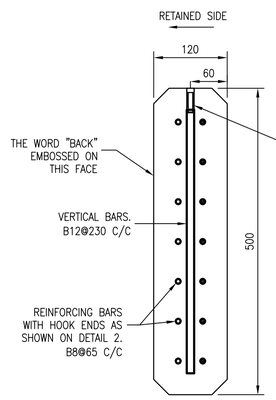

EXAMPLE SECTION THROUGH 500mm PRECAST PLANK
REINFORCEMENT DESIGN/SCHEDULING TBC BY DESIGNER
SCALE 1:5

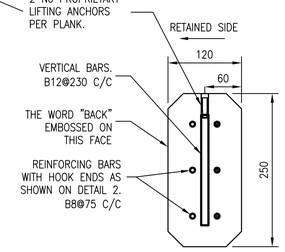

EXAMPLE SECTION THROUGH 250mm PRECAST PLANK
REINFORCEMENT DESIGN/SCHEDULING TBC BY DESIGNER
SCALE 1:5

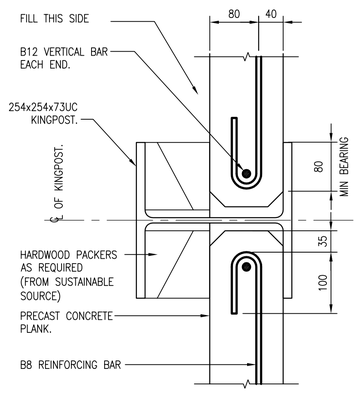

DETAIL 2
SCALE 1:5

NOTES (CONT.)	
C8	SOIL ANCHORS SHALL BE A MINIMUM OF 1500MM BELOW THE SLEEPERS.
C9	SOIL ANCHORS TO BE INSTALLED AND TESTED IN ACCORDANCE WITH THE PROJECT SPECIFIC SPECIFICATION.
	GROUT
C10	CEMENTITIOUS GROUT FOR SOIL ANCHOR INSTALLATION SHALL HAVE A MINIMUM CUBE STRENGTH OF 40N/mm² (28 DAYS). WATER/CEMENT RATIO NOT TO EXCEED 0.45 GROUT CUBE SAMPLES (3No.) ARE TO BE TAKEN AND TESTED INITIALLY EVERY 5th SOIL ANCHOR INSTALLATION.
	BACKFILL
C11	GRANULAR FILL MATERIALS TO BE FREE DRAINING AND PLACED AND COMPACTED IN ACCORDANCE WITH THE SPECIFICATION FOR HIGHWAYS WORKS. SUITABLE FILL IS HA CLASS 6N GRANULAR FILL. OTHER CLASSES OF BACKFILL CAN BE CONSIDERED FOR USE BEHIND THE WALL SUBJECT TO THE NECESSARY LABORATORY CLASSIFICATION AND STRENGTH TESTS AND WALL STABILITY DESIGN.
	PROTECTIVE TREATMENT
C12	THE PROTECTIVE SYSTEM SHALL BE IN ACCORDANCE WITH NR/SP/CIV/039 (REFERRED TO AS RT98)
C13	PROTECTIVE TREATMENTS SHALL BE APPLIED IN ACCORDANCE WITH NR/GN/CIV/002
	REINFORCED CONCRETE
C14	ALL REINFORCEMENT SHALL BE HIGH YIELD, DEFORMED TYPE 2 BARS, IN ACCORDANCE WITH B.S.4449;2005.
C15	CONCRETE TO BE IN ACCORDANCE WITH BS. 8500 AND EN 206–1. A COMPRESSIVE STRENGTH OF C35/45 MINIMUM IS REQUIRED FOR THE PLANKS. U3/F3 FINISH ON PLANKS.
C16	CONCRETE TO BE IN ACCORDANCE WITH BS. 8500 AND EN 206–1. A COMPRESSIVE STRENGTH OF C40/50 MINIMUM IS REQUIRED FOR THE PILES AND WALL.

DRAWING No. NR/CIV/SD/208

NOTES

A1 FOR GENERAL NOTES SEE DRG NR/CIV/SD/200.

A2 FOR GENERIC RISK ASSESSMENT, REFER TO DRG NR/CIV/SD/200 TABLE 1. DESIGNER TO COMPILE SITE SPECIFIC RISK ASSESSMENT.

B GENERAL

B1 DESIGNER WILL NEED TO CONFIRM THE WALL AND SLOPE STABILITY AT ALL THE CONSTRUCTION STAGES.

B2 THE DESIGNER OF A SCHEME SHALL BE RESPONSIBLE FOR SPECIFYING THE REQUIRED PILE DEPTH AND SPACING.

B3 THIS SOLUTION REQUIRES CLOSE TOLERANCE OF PILE POSITION TO ENSURE APPROPRIATE BEARING FOR CONCRETE PLANKS – REFER BEARING DETAIL 2.

C SPECIFICATION

STEELWORK

C1 STEELWORK TO BE GRADE S275 (UNLESS NOTIFIED OTHERWISE) IN ACCORDANCE WITH EN 1993–1 AND BS EN 10025.

C2 ALL STEELWORK TO BE HOT DIP GALVANISED TO BS EN ISO 1461 TO ACHIEVE A COATING THICKNESS = 85 MICRONS.

C3 ANY BLEMISHES ON THE EXPOSED STEEL COMPONENTS TO BE PAINTED WITH ZINC–BASED ANTI–CORROSION PAINT AFTER INSTALLATION.

SOIL ANCHORS (OPTIONAL)

C4 IF THE WALL DESIGN REQUIRES ADDITIONAL SUPPORT SOIL ANCHORS SHALL BE PROVIDED, DESIGNED TO BS EN 1997. DESIGNER TO CONFIRM REQUIREMENT IN SITE SPECIFIC FORM A / FORM B. THE PROPERTIES OF THE SOIL ANCHORS SHALL BE CONFIRMED BY THE DESIGNER (LENGTH, BORE DIAMETER ETC). IT IS ENVISAGED SUITABILITY TESTS WILL BE REQUIRED TO VERIFY THE ANCHOR DESIGN.

C5 THE DESIGNER SHALL CONFIRM THE MOVEMENTS REQUIRED TO MOBILISE THE REQUIRED LOADS IN THE SOIL ANCHORS ANCHORS ARE ACCEPTABLE. DESIGNER TO CONSIDER PROVIDING A PRELOAD TO REDUCE MOVEMENTS.

C6 SOIL ANCHORS SHALL BE DOUBLE CORROSION–PROTECTED. THE REQUIREMENT FOR PROTECTIVE COATING SHALL BE DETERMINED BY THE DESIGNER IN DETERMINING THE APPROPRIATE SACRIFICIAL THICKNESS. REFERENCE CAN BE MADE TO SECTION 9 OF CIRIA GUIDE C637. APPROPRIATE ANCHOR HEAD PROTECTION FOR THE ENVIRONMENT SHALL BE PROVIDED.

C7 SIZING ALL COMPONENTS OF THE SOIL ANCHOR. CONSIDERATION SHALL BE GIVEN TO THE FOLLOWING:–
- INCLINATION
- GROUT BORE DIA.
- ANCHOR STRENGTH (TAKING ACCOUNT ANY SACRIFICIAL LOSS)
- FACE PLATE SIZE AND THICKNESS.
- CORROSION PROTECTION

Rev	Date	Description of revision	Design'd	C'kd
A	MAY 2011	FIRST ISSUE	RKA	AW

Network Rail

Network Rail Infrastructure Ltd. Registered Office: Kings Place, 90 York Way, London, N1 9AG

Approved	P CLARK	Senior Prog. Eng. Manager Investment Projects Building & Civils	PC	MAY 2011
	Name	Position	Signature	Date

Master copy with original signatures held by Network Rail HQ CIVIL ENGINEERING STANDARD DESIGN

© COPYRIGHT NETWORK RAIL 2011

RETAINING WALLS

BORED PILE KINGPOST RETAINING WALL

Scale	AS SHOWN @ A1	
Drawing Number	NR/CIV/SD/208	REV. A

Full document details: NR NR-CIV-SD-209 ISSUE A 2011
Documents Document Sharing Hub
Copyright Network Rail
Provided by NRI under licence with Network Rail
Licensee:Hellenic Wilkinson(SD0595102). User:sam. allen
Date/Time:Wed Jun 01 07:00:00 2011 Access from IHS