Supplementary Information

The following information is associated with Network Rail Standard:
NR CIV/SD/2102 Rev B

Additional Content Access

Click the link below to access CAD version of this drawing.

CAD Drawing

- CIV/SD/2102

If you have any questions, or need assistance, please contact **IHS Support**

Information accessed via the links above is the property of the Copyright holder

IHS Additional Content Page

Documents
Document Sharing Hub

Copyright Network Rail
Provided by IHS under license with Network Rail
No reproduction or networking permitted without license from IHS
Full document details: NR NR-CIV-SD-2102 ISSUE B 2012

Licensee=Weston Williamson/5989497001, User=sam, albett
Not for Resale, 03/27/2016 19:51:58 MDT

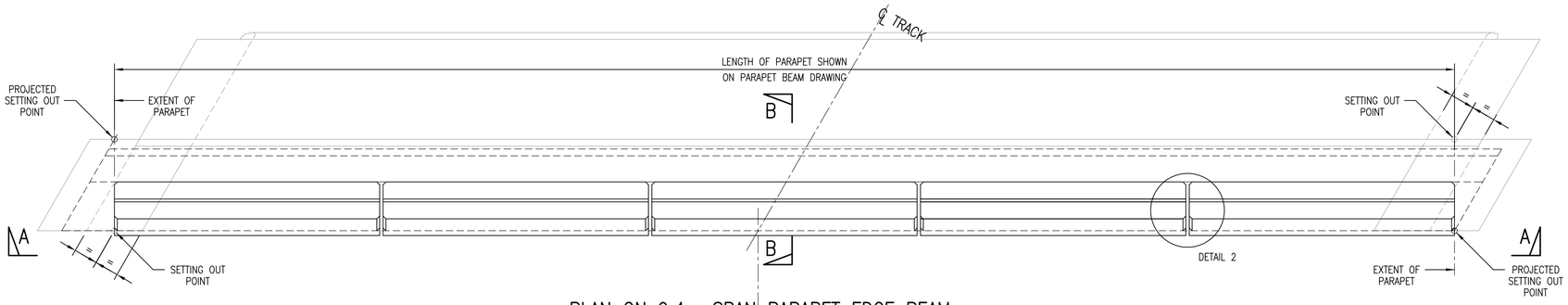

PLAN ON 9.4m SPAN PARAPET EDGE BEAM

SCALE 1:25

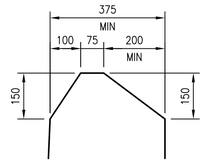

DETAIL 1

SCALE 1:10

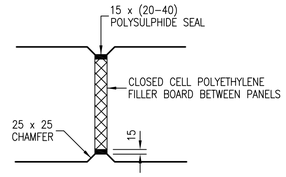

DETAIL 2

SCALE 1:10

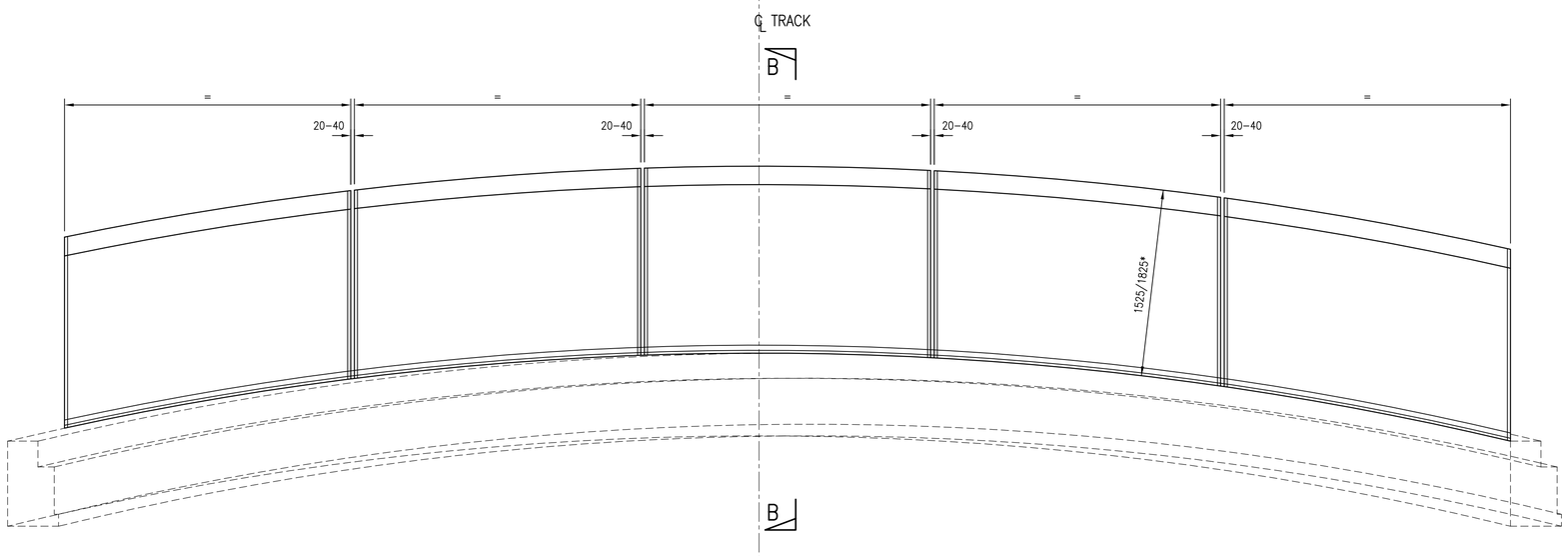

ELEVATION A–A
CURVED PARAPET

SCALE 1:25

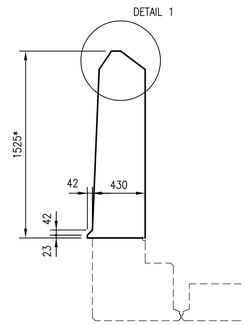

SECTION B–B
(1525 HIGH)

SCALE 1:25

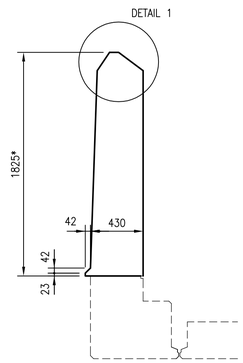

SECTION B–B
(1825 HIGH)

SCALE 1:25

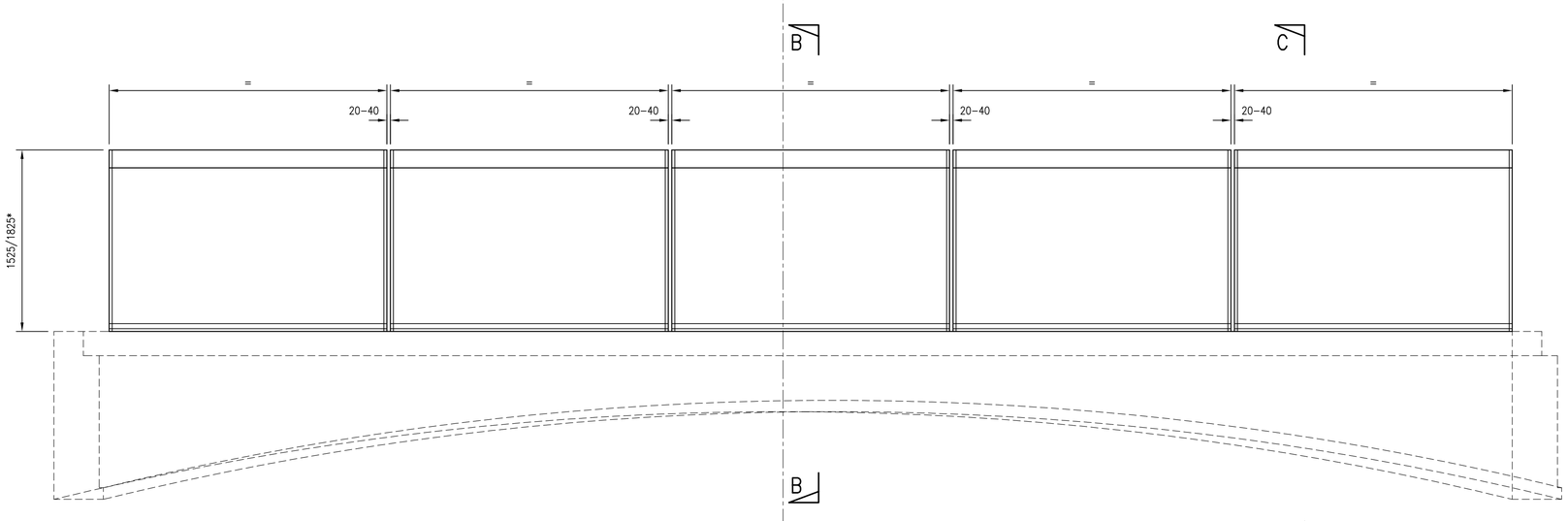

ELEVATION A–A
HORIZONTAL PARAPET

SCALE 1:25

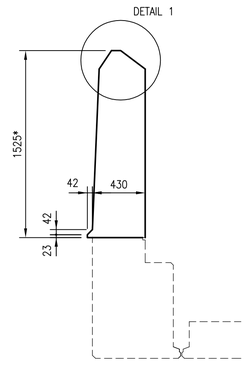

SECTION C–C
(1525 HIGH)

SCALE 1:25

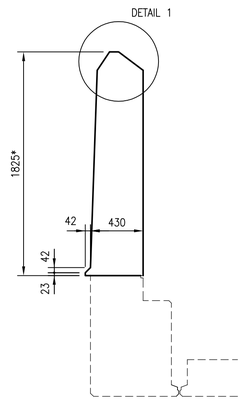

SECTION C–C
(1825 HIGH)

SCALE 1:25

DRAWING No. NR/CIV/SD/2102

NOTES

1. FOR GENERAL NOTES REFER TO DRAWING No. NR/CIV/SD/2001.

NOTE
ANY SPAN BETWEEN:
7.4m AND 9.4m, INCREMENT OF 5mm.
ANY SKEW BETWEEN:
0deg AND 45deg, LEFT OR RIGHT.
ANY PARAPET HEIGHTS:
BETWEEN 1525mm AND 1825mm.

Rev	Date	Description of revision	Designed	C'kd
B	27.04.12	SECOND ISSUE	SzT	SWF
A	12.10.10	FIRST ISSUE	SzT	SWF

Network Rail

Network Rail Infrastructure Ltd. Registered Office:
Kings Place, 90 York Way, London, N1 9AG

Approved	P. Clark	Head of Engineering IP 'Central'	PC	Apr 2013
	Name	Position	Signature	Date

Master copy with original signatures held by Network Rail HQ
CIVIL ENGINEERING STANDARD DESIGN

© COPYRIGHT NETWORK RAIL 2013

STANDARD CONARCH OVERBRIDGE

GENERAL ARRANGEMENT 5 SECTION CONCRETE PARAPET OVER 14 METRES

Scale	AS SHOWN
Drawing Number	NR/CIV/SD/2102 B

Full document details: NR NR-CIV-SD-2102 ISSUE B 2012
Documents
Document Sharing Hub
Licensed Network Rail Limited 2013 Licence No. 100037702
Copyright Network Rail
Provided by HS1 under licence with Network Rail
Reproduced by permission of Network Rail. Licence from HS1