Supplementary Information

The following information is associated with Network Rail Standard:
NR CIV/SD/2126-1 Rev B

Additional Content Access

Click the link below to access CAD version of this drawing.

CAD Drawing

- CIV/SD/2126-1

If you have any questions, or need assistance, please contact **IHS Support**

Information accessed via the links above is the property of the Copyright holder

IHS Additional Content Page

Documents
Document Sharing Hub

Copyright Network Rail
Provided by IHS under license with Network Rail
No reproduction or networking permitted without license from IHS
Full document details: NR NR-CIV-SD-2126-1 ISSUE B 2012

Licensee=Weston Williamson/5989497001, User=sam, albett
Not for Resale, 03/27/2016 19:51:42 MDT

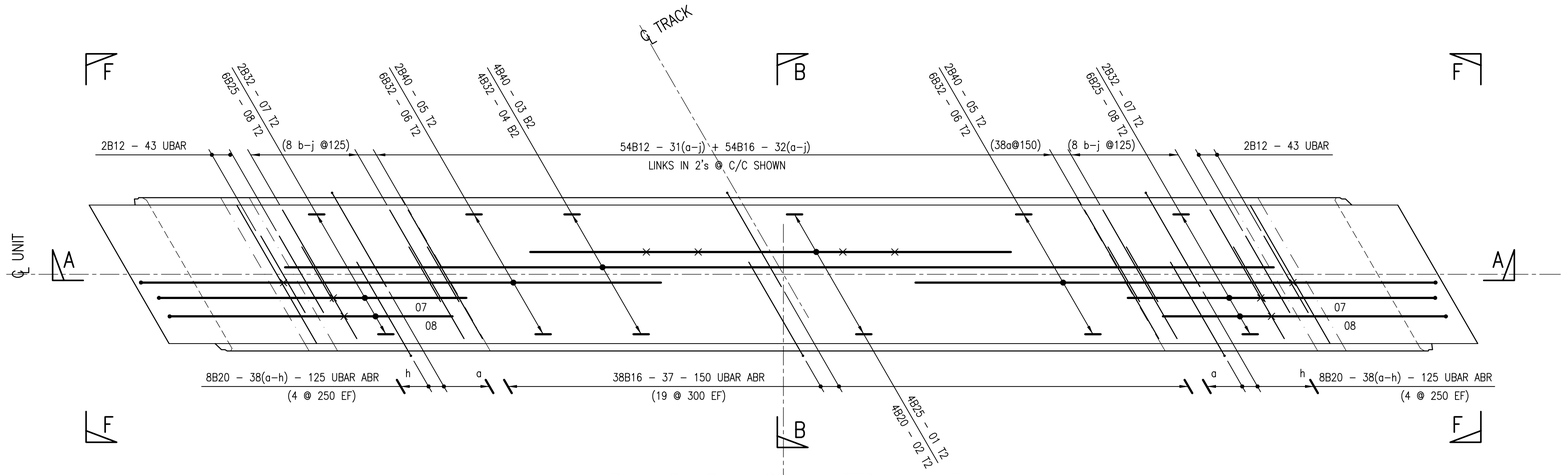

PLAN ON 8.4m SPAN INTERNAL UNIT
SKEW 30°

FOR SETTING OUT OF BAR Mks 37 TO 40
REFER TO DRAWING No. NR/CIV/SD/2128–3

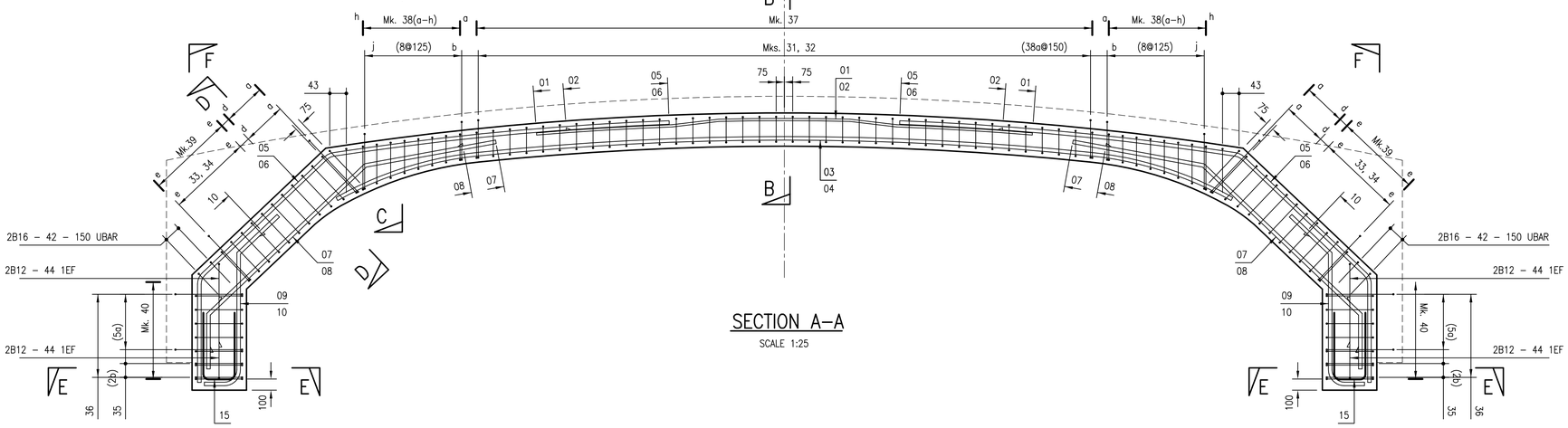

SECTION A–A
SCALE 1:25

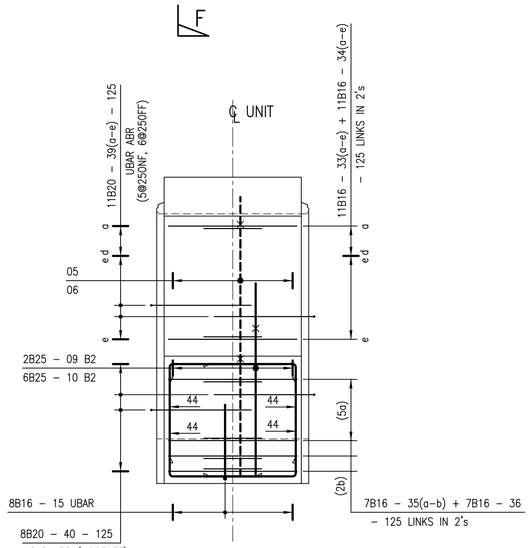

ELEVATION F–F
SCALE 1:25

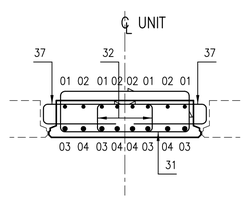

SECTION B–B
1250 WIDE SECTION
(BENDING SCHEDULE WIDTH)

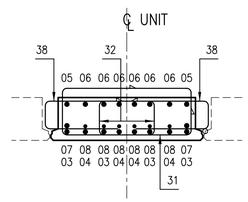

SECTION C–C
1250 WIDE SECTION
(BENDING SCHEDULE WIDTH)

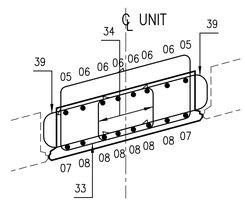

SECTION D–D
1250 WIDE SECTION
(BENDING SCHEDULE WIDTH)

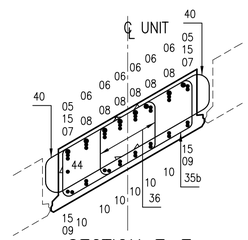

SECTION E–E
1250 WIDE SECTION
(BENDING SCHEDULE WIDTH)

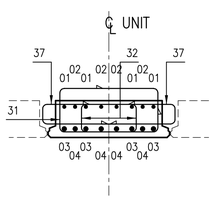

SECTION B–B
900 WIDE SECTION

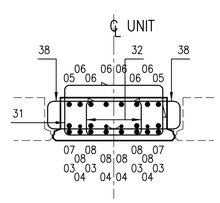

SECTION C–C
900 WIDE SECTION

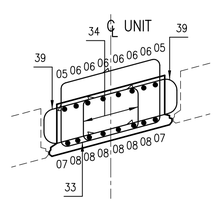

SECTION D–D
900 WIDE SECTION

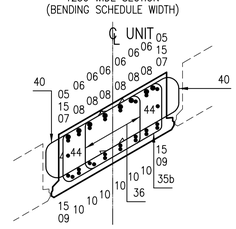

SECTION E–E
900 WIDE SECTION

DRAWING No. NR/CIV/SD/2126–1

NOTES

1. FOR GENERAL NOTES REFER TO DRAWING No. NR/CIV/SD/2001.

Rev	Date	Description of revision	Designed	C'kd
B	27.04.12	SECOND ISSUE	SzT	SWF
A	12.10.10	FIRST ISSUE	SzT	SWF

Network Rail

Network Rail Infrastructure Ltd. Registered Office:
Kings Place, 90 York Way, London, N1 9AG

Approved	P. Clark	Head of Engineering IP Central	PC	Apr 2013
	Name	Position	Signature	Date

Master copy with original signatures held by Network Rail HQ
CIVIL ENGINEERING STANDARD DESIGN

© COPYRIGHT NETWORK RAIL 2013

STANDARD CONARCH OVERBRIDGE

REINFORCEMENT DETAILS 8.4m INTERNAL UNIT RIGHT SKEW 30°

SHEET 1

Scale	1:25
Drawing Number	NR/CIV/SD/2126–1 B

Full document details: NR NR-CIV-SD-2126-1 ISSUE B 2012
AVA Documents Document Sharing Hub
Copyright Network Rail
Provided by IHS under licence with Network Rail
No reproduction or distribution permitted without licence from IHS
Licensee=Network Rail Group, User=, IP=, 10/10/2013 08:59:58 Single User, Non-commercial use only