Supplementary Information

The following information is associated with Network Rail Standard:
NR CIV/SD/2138-2 Rev B

Additional Content Access

Click the link below to access CAD version of this drawing.

CAD Drawing

- CIV/SD/2138-2

If you have any questions, or need assistance, please contact **IHS Support**

Information accessed via the links above is the property of the Copyright holder

IHS Additional Content Page

Documents
Document Sharing Hub

Copyright Network Rail
Provided by IHS under license with Network Rail
No reproduction or networking permitted without license from IHS
Full document details: NR NR-CIV-SD-2138-2 ISSUE B 2012

Licensee=Weston Williamson/5989497001, User=sam, albett
Not for Resale, 03/27/2016 19:54:47 MDT

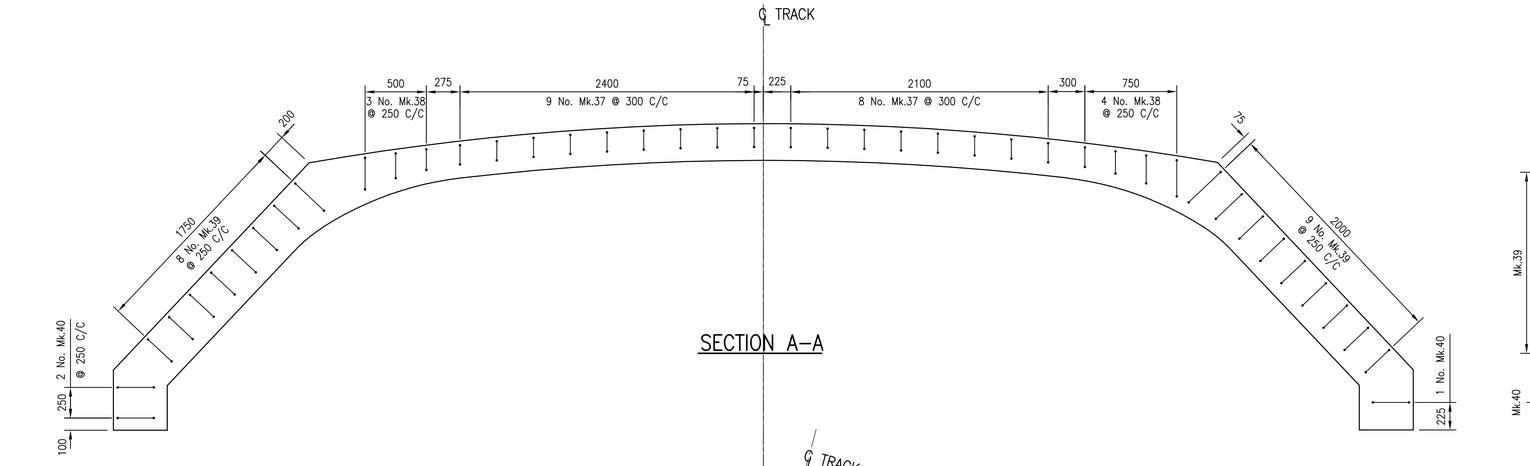

SECTION A–A

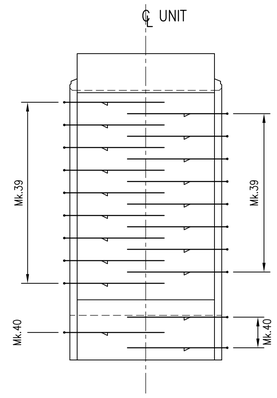

ELEVATION B–B

SCALE 1:25

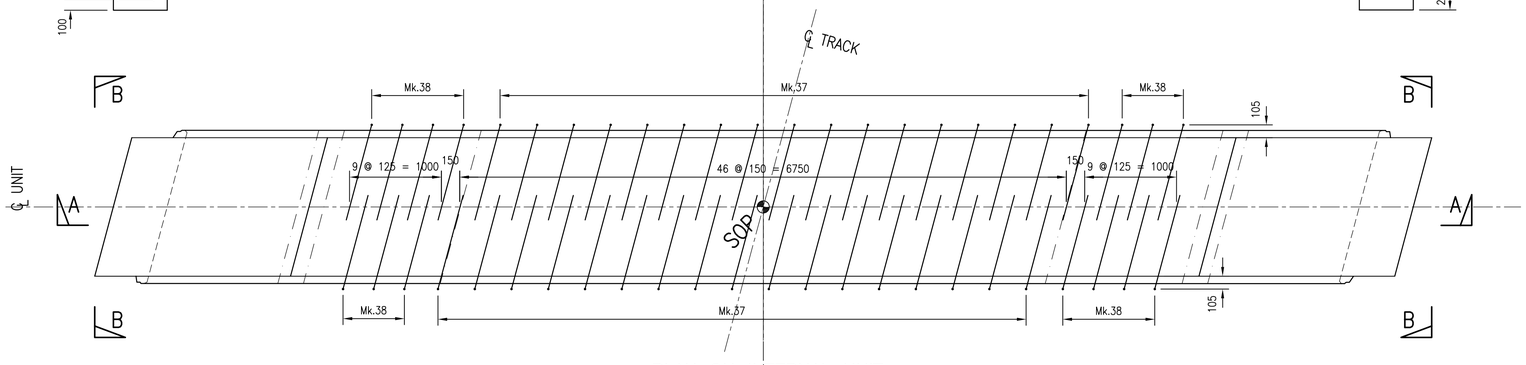

PLAN ON INTERNAL UNIT
LEFT HAND 15° SKEW
SHEAR KEY REINFORCEMENT SETTING OUT

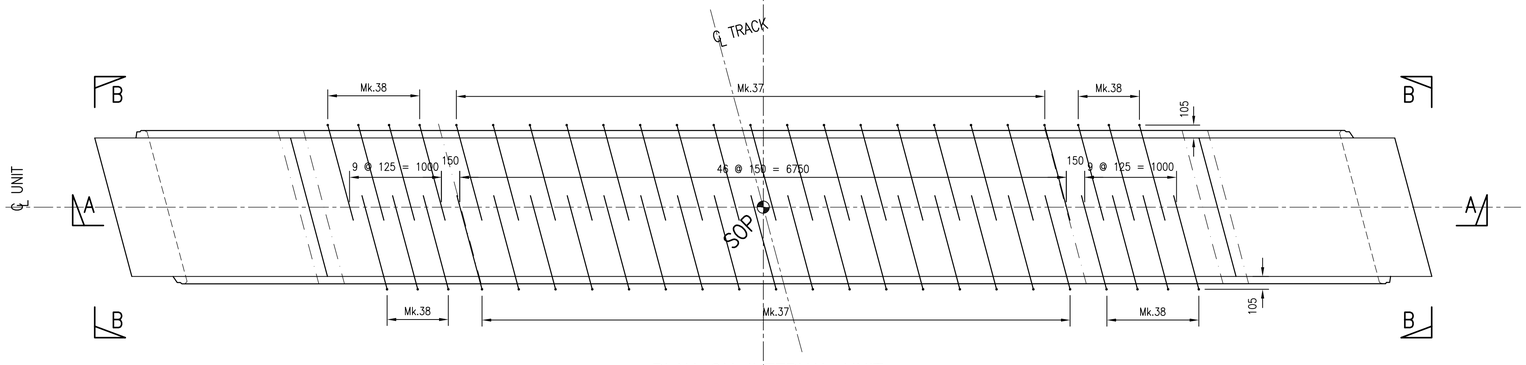

PLAN ON INTERNAL UNIT
RIGHT HAND 15° SKEW
SHEAR KEY REINFORCEMENT SETTING OUT

THIS DRAWING TO BE READ
IN CONJUNCTION WITH
DRAWING Nos. NR/CIV/SD/2132 AND 2135

DRAWING No. NR/CIV/SD/2138–2

NOTES

1. FOR GENERAL NOTES REFER TO DRAWING No. NR/CIV/SD/2001.

Rev	Date	Description of revision	Designed	C'kd
B	27.04.12	SECOND ISSUE	SzT	SWF
A	12.10.10	FIRST ISSUE	SzT	SWF

Network Rail

Network Rail Infrastructure Ltd. Registered Office:
Kings Place, 90 York Way, London, N1 9AG

Approved	P. Clark	Head of Engineering IP Central	PC	Apr 2013
	Name	Position	Signature	Date

Master copy with original signatures held by Network Rail HQ
CIVIL ENGINEERING STANDARD DESIGN

© COPYRIGHT NETWORK RAIL 2013

STANDARD CONARCH OVERBRIDGE

REINFORCEMENT DETAILS
9.4m INTERNAL UNIT
SETTING OUT DETAILS
SHEET 2 – SKEW 15°

Scale	1:25	
Drawing Number	NR/CIV/SD/2138–2	B

Full document details: NR NR-CIV-SD- 2138-2 ISSUE B 2012
AVA Documents Document Sharing Hub
Copyright Network Rail
Provided by IHS under licence with Network Rail
Reproduced by permission of Network Rail
Licensee=Mapon Worldwide/5958410001, User=sam, allan
No reproduction or distribution allowed without permission.