Supplementary Information

The following information is associated with Network Rail Standard:
NR CIV/SD/2147-1 Rev B

Additional Content Access

Click the link below to access CAD version of this drawing.

CAD Drawing

- CIV/SD/2147-1

If you have any questions, or need assistance, please contact **IHS Support**

Information accessed via the links above is the property of the Copyright holder

IHS Additional Content Page

Documents
Document Sharing Hub

Copyright Network Rail
Provided by IHS under license with Network Rail
No reproduction or networking permitted without license from IHS
Full document details: NR NR-CIV-SD-2147-1 ISSUE B 2012

Licensee=Weston Williamson/5989497001, User=sam, albett
Not for Resale, 03/27/2016 19:55:21 MDT

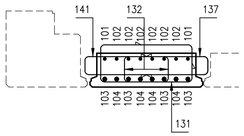

SECTION B–B

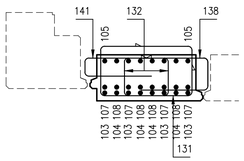

SECTION C–C

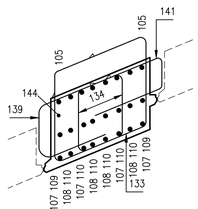

SECTION D–D

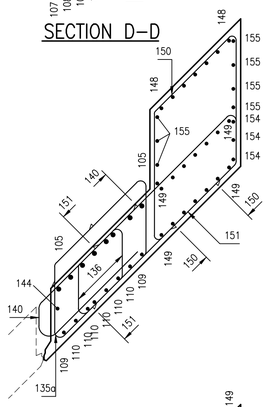

SECTION G–G

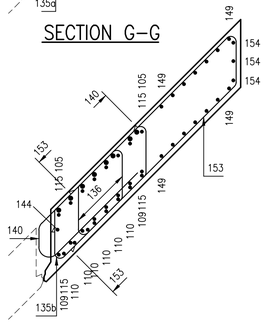

SECTION E–E

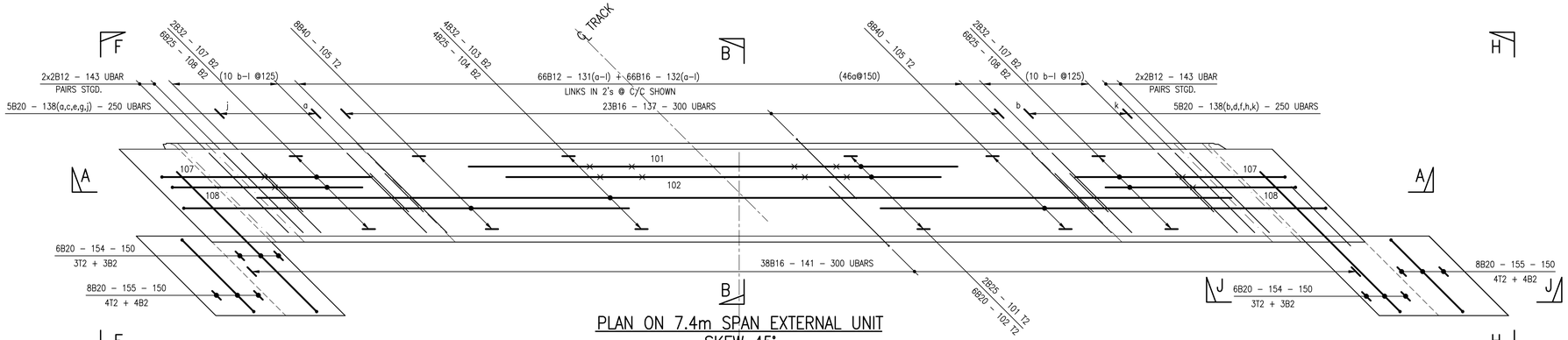

PLAN ON 7.4m SPAN EXTERNAL UNIT
SKEW 45°

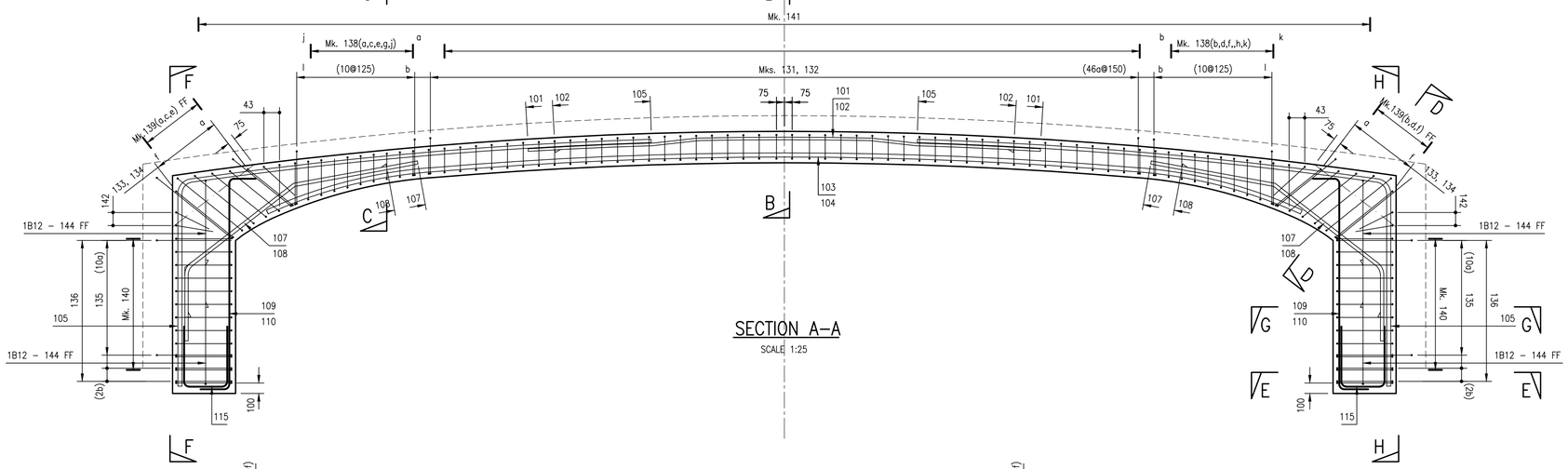

SECTION A–A
SCALE 1:25

FOR SETTING OUT OF BAR Mks 137 TO 140
REFER TO DRAWING No. NR/CIV/SD/2148–4

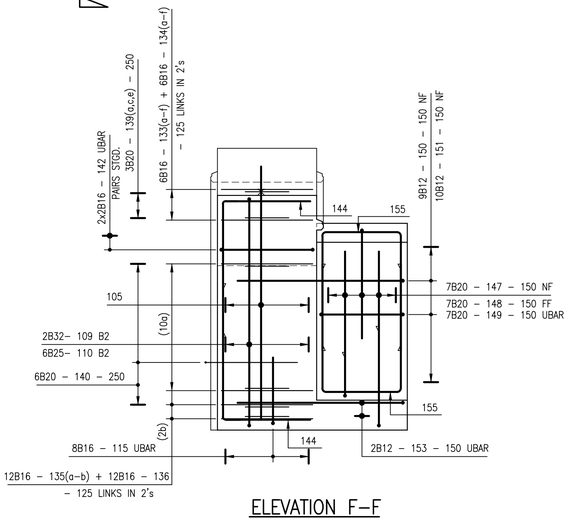

ELEVATION F–F
SCALE 1:25

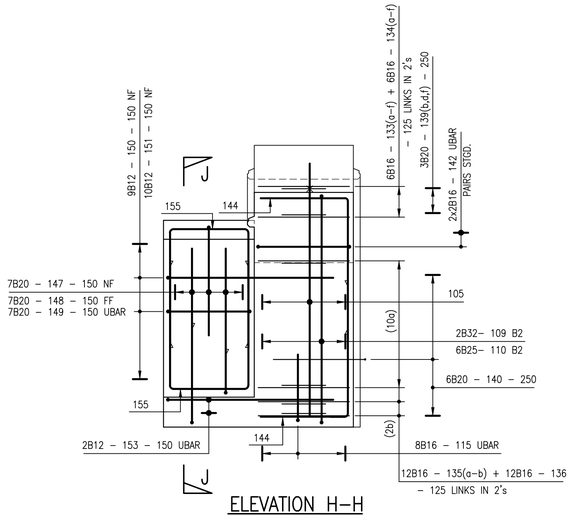

ELEVATION H–H
SCALE 1:25

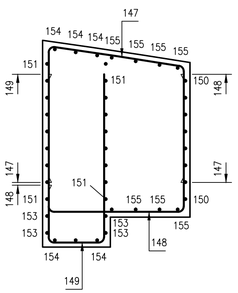

SECTION J–J

DRAWING No.	NR/CIV/SD/2147–1

NOTES

1. FOR GENERAL NOTES REFER TO DRAWING No. NR/CIV/SD/2001.

Rev	Date	Description of revision	Design'd	C'kd
B	27.04.12	SECOND ISSUE	SzT	SWF
A	12.10.10	FIRST ISSUE	SzT	SWF

Network Rail

Network Rail Infrastructure Ltd. Registered Office: Kings Place, 90 York Way, London, N1 9AG

Approved	P. Clark	Senior Prog. Eng. Manager Investment Projects Building & Civils	PC	Oct–10
	Name	Position	Signature	Date

Master copy with original signatures held by Network Rail HQ CIVIL ENGINEERING STANDARD DESIGN

© COPYRIGHT NETWORK RAIL 2010

STANDARD CONARCH OVERBRIDGE

REINFORCEMENT DETAILS 7.4m EXTERNAL UNIT RIGHT SKEW 45°

SHEET 1

Scale	1:25	
Drawing Number	NR/CIV/SD/2147–1	B

Full document details NR/NR-CIV-SD-2147-115538 B 2012
AXA Documents Document Sharing Hub
Copyright Network Rail
Uncontrolled when printed
Page 1 of 1