Supplementary Information

The following information is associated with Network Rail Standard:
NR CIV/SD/2158-3 Rev B

Additional Content Access

Click the link below to access CAD version of this drawing.

CAD Drawing

- CIV/SD/2158-3

If you have any questions, or need assistance, please contact **IHS Support**

Information accessed via the links above is the property of the Copyright holder

IHS Additional Content Page

--`,,,,,,`,,,,,,`,,`,,,,,,,,``-`-`,,`,,`,`,,`---

Documents
Document Sharing Hub

Copyright Network Rail
Provided by IHS under license with Network Rail
No reproduction or networking permitted without license from IHS
Full document details: NR NR-CIV-SD-2158-3 ISSUE B 2012

Licensee=Weston Williamson/5989497001, User=sam, albett
Not for Resale, 03/27/2016 20:00:00 MDT

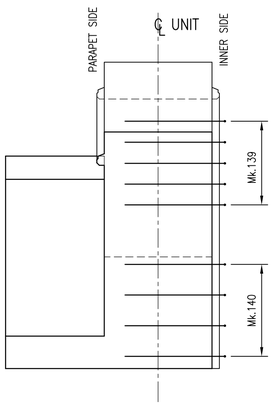

ELEVATION B–B

SCALE 1:25

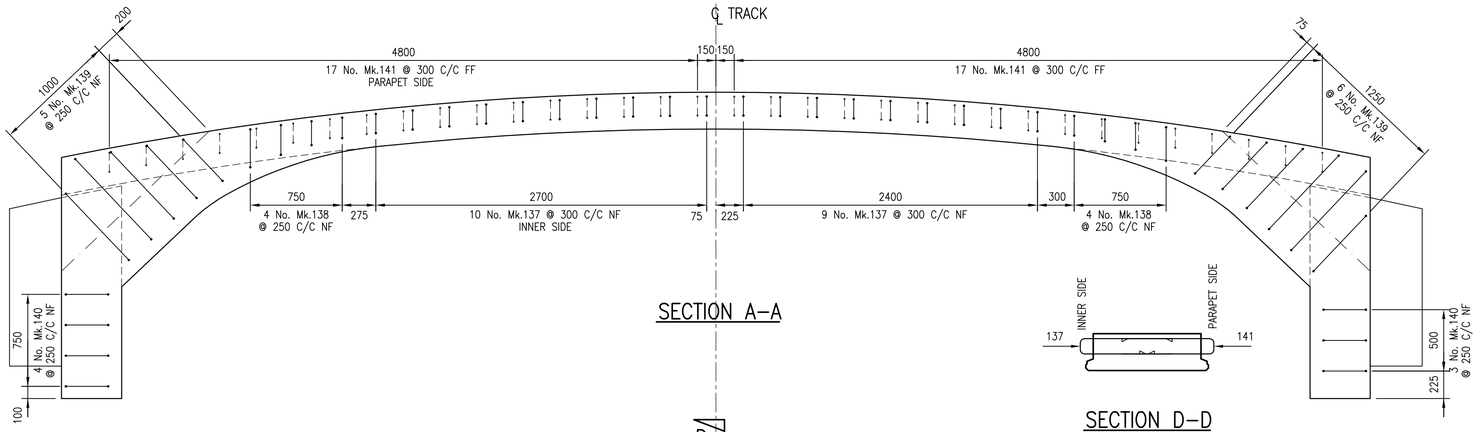

SECTION A–A

SECTION D–D

SCALE 1:25

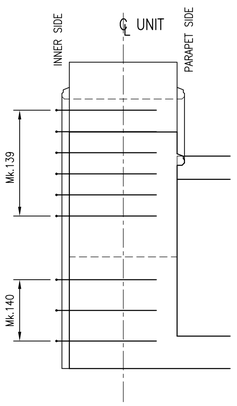

ELEVATION C–C

SCALE 1:25

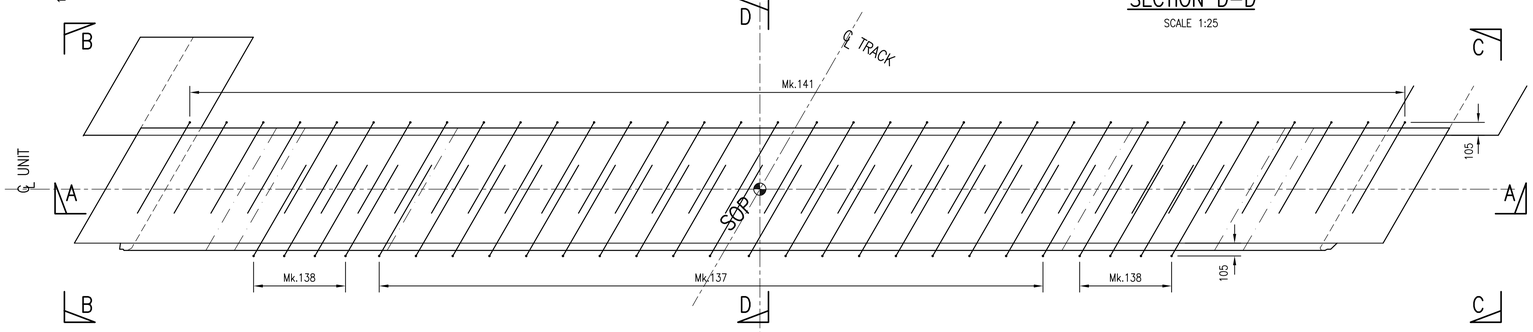

PLAN ON EXTERNAL UNIT
LEFT HAND 30° SKEW
SHEAR KEY REINFORCEMENT SETTING OUT

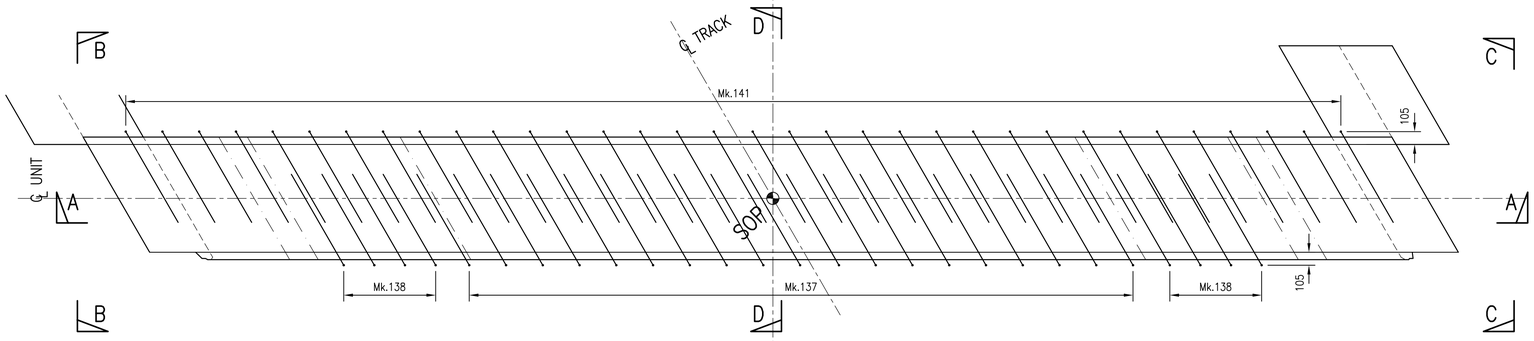

PLAN ON EXTERNAL UNIT
RIGHT HAND 30° SKEW
SHEAR KEY REINFORCEMENT SETTING OUT

THIS DRAWING TO BE READ
IN CONJUNCTION WITH
DRAWING Nos. NR/CIV/SD/2153 AND 2156

DRAWING No. NR/CIV/SD/2158–3

NOTES

1. FOR GENERAL NOTES REFER TO DRAWING No. NR/CIV/SD/2001.

Rev	Date	Description of revision	Designed	C'kd
B	27.04.12	SECOND ISSUE	SzT	SWF
A	12.10.10	FIRST ISSUE	SzT	SWF

Network Rail

Network Rail Infrastructure Ltd. Registered Office:
Kings Place, 90 York Way, London, N1 9AG

	Name	Position	Signature	Date
Approved	P. Clark	Head of Engineering IP Central	PC	Apr 2013

Master copy with original signatures held by Network Rail HQ
CIVIL ENGINEERING STANDARD DESIGN

© COPYRIGHT NETWORK RAIL 2013

STANDARD CONARCH OVERBRIDGE

REINFORCEMENT DETAILS
8.4m EXTERNAL UNIT
SETTING OUT DETAILS
SHEET 3 – SKEW 30°

Scale 1:25

Drawing Number NR/CIV/SD/2158–3 B

Full document details: NR NR-CIV-SD-2158-3 ISSUE B 2012
Documents
Document Sharing Hub
Copyright Network Rail
Provided by IHS under licence with Network Rail
No reproduction or distribution permitted without prior licence from IHS
Licensee=Mapon Volkovych/5935951001, User=sam, sfirst
Not for resale, 2013-04-22 06:00:59 MDT