Supplementary Information

The following information is associated with Network Rail Standard:
**NR CIV/SD/2172-1** Rev B

## Additional Content Access

Click the link below to access CAD version of this drawing.

### CAD Drawing

- CIV/SD/2172-1

If you have any questions, or need assistance, please contact **IHS Support**

Information accessed via the links above is the property of the Copyright holder

**IHS Additional Content Page**

--`,,,,,,`,,,,,,`,,`,,,,,,,,``-`-`,,`,,`,`,,`---

Documents
Document Sharing Hub

Copyright Network Rail
Provided by IHS under license with Network Rail
No reproduction or networking permitted without license from IHS

Licensee=Weston Williamson/5989497001, User=sam, albett
Not for Resale, 03/27/2016 19:59:45 MDT

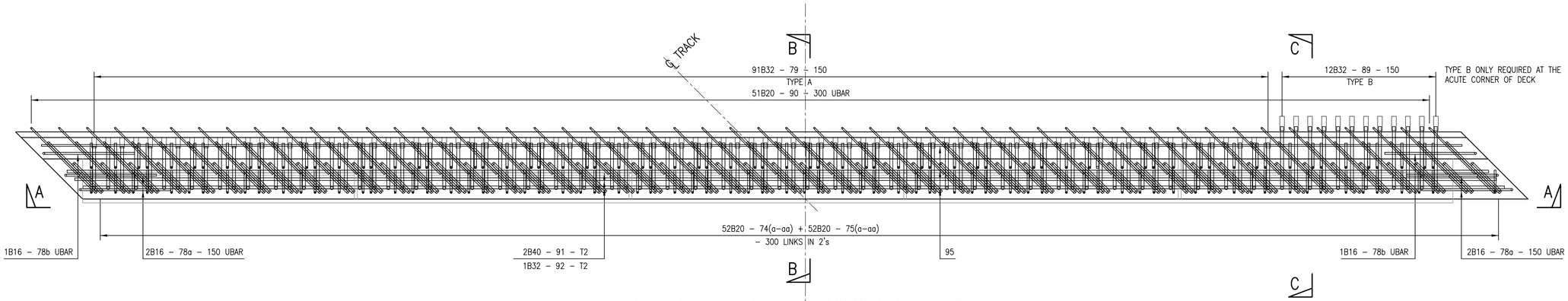


## PLAN ON 9.4m SPAN CONCRETE PARAPET BEAM SKEW 45°

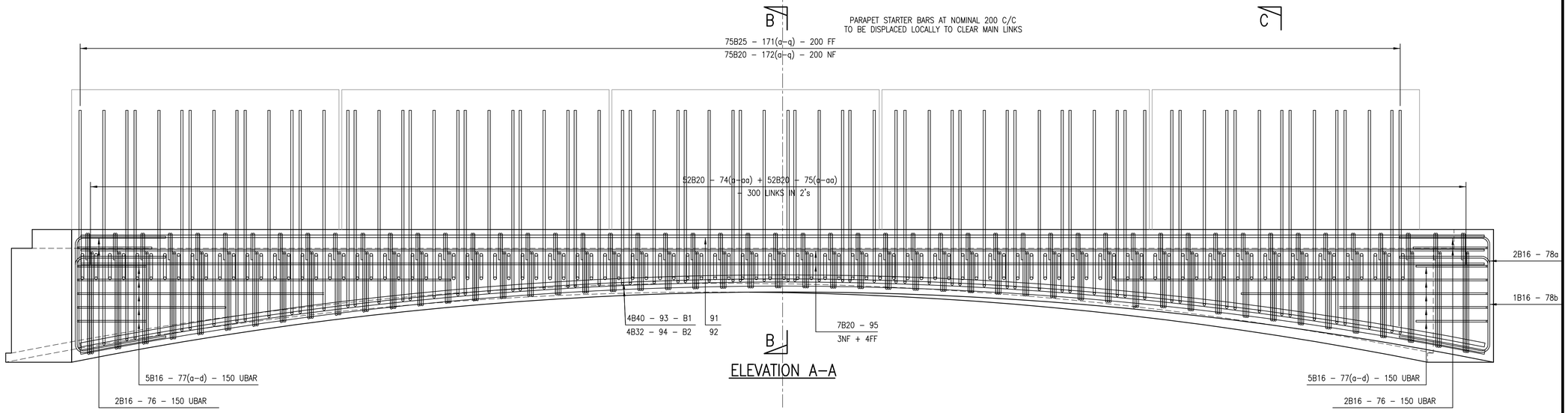


## ELEVATION A–A

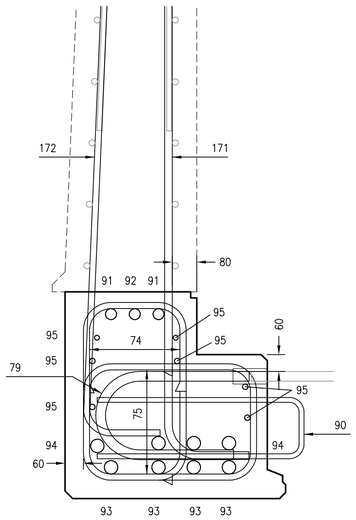


## SECTION B–B

SCALE 1:10

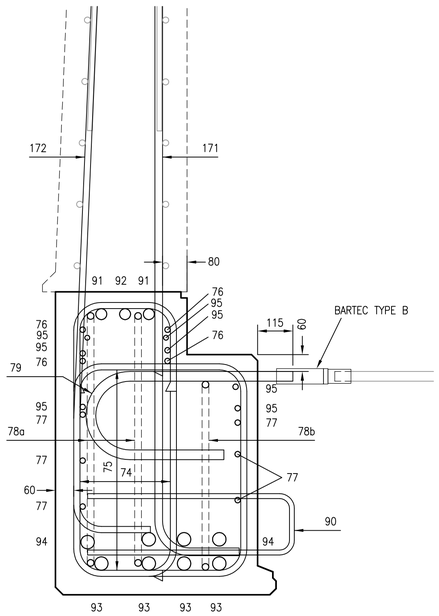


## SECTION C–C

SCALE 1:10

DRAWING No. NR/CIV/SD/2172–1

NOTES

1. FOR GENERAL NOTES REFER TO DRAWING No. NR/CIV/SD/2001.

| Rev | Date | Description of revision | Designed | C'kd |
|---|---|---|---|---|
| B | 27.04.12 | SECOND ISSUE | SzT | SWF |
| A | 12.10.10 | FIRST ISSUE | SzT | SWF |

Network Rail

Network Rail Infrastructure Ltd. Registered Office: Kings Place, 90 York Way, London, N1 9AG

| | | | | |
|---|---|---|---|---|
| Approved | P. Clark | Head of Engineering IP Central | PC | Apr 2013 |
| | | | | |
| | Name | Position | Signature | Date |

Master copy with original signatures held by Network Rail HQ CIVIL ENGINEERING STANDARD DESIGN

© COPYRIGHT NETWORK RAIL 2013

# STANDARD CONARCH OVERBRIDGE

# 9.4m CONCRETE PARAPET BEAM RIGHT SKEW 45°

SHEET 1

| | |
|---|---|
| Scale | 1:25 |
| Drawing Number | NR/CIV/SD/2172–1 B |

Full document details: NR NR-CIV-SD-2172-1 ISSUE B 2012
Document Sharing Hub
Copyright Network Rail
Reproduced by permission
Provided by HS under licence with Network Rail
Not to be reproduced or disclosed without prior written consent
Downloaded on 2013-04-15 from www.rgsc.com, User name: sjw